Multi-sized closer with sleek design
for busy architectural openings

8000 SERIES

DOOR CLOSER

CATALOG

Norton®
ASSA ABLOY

Experience a safer
and more open world

INTRODUCTION

Multi-sized surface closer offering a complete range of arms and a sleek, minimal design suited for moderate- to high-traffic, architectural openings.

FEATURES

- Exceeds 25 million cycles
- Adjustable spring sizes 1 through 6
- Tri-Style® packaging standard (regular arm, top jamb and parallel arm mounting)
- Non-handed
- Staked valves
- Cast aluminum closer body
- Rack and pinion design
- 1-1/4" (32mm) diameter piston
- 5/8" (16mm) diameter pinion journals
- 2-1/8" (54mm) projection (standard covers)
- All standard arm applications (with slim, full or metal covers) allow doors to swing 180 degrees, conditions permitting
- Full size template
- Standard, separate and independent, latch, sweep and back check intensity valves
- Application specific arms: Regular (S), Top Jamb (JS) and Parallel (P)
- Heavy-duty arms; Regular Rigid, Parallel Rigid, CloserPlus®, CloserPlus Spring™, Unitrol®
- Slide Tracks: push or pull side mounting
- 30-year limited warranty

OPTIONAL FEATURES

- Lead lined metal cover - suffix MLL
- Metal, architectural plastic or architectural metal covers (8501 only)
- Delayed action

Features	8301	8501
Slim Line Cover	✓	
Full cover		✓

TABLE OF CONTENTS

Introduction, Features 2
Overview, Certifications 3
Explanation of Features 4-5
Suggested Specifications 6
Applications 7-10
Technical Details 11-24
Brackets, Mounting Plates 25-36
Parts 37
Arm Assemblies 38-50
Fasteners 51
Finishes 52
How to Order 54

OVERVIEW

CUTAWAY VIEW

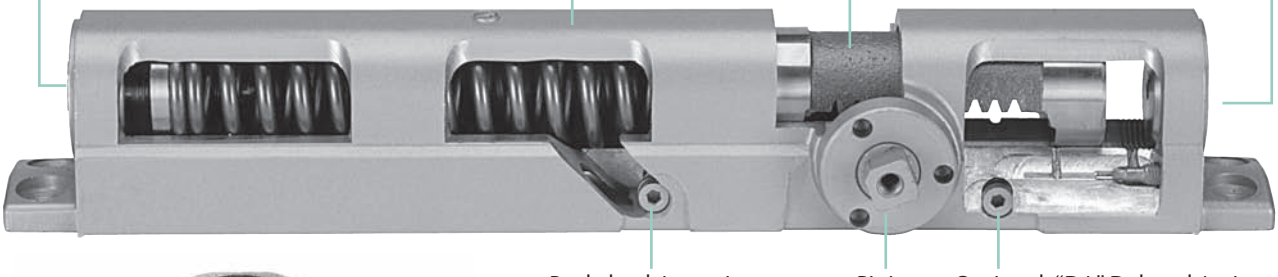

End-View

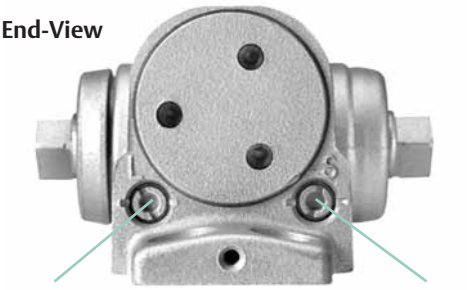

CERTIFICATIONS

- ANSI/BHMA A156.4, Grade 1 certified
- UL / cUL listed for use on fire rated doors
- UL10C listed for positive pressure fire test
- 8301 and 8501 door closers are designed to comply with requirements for the Americans with Disabilities Act (A.D.A)and ANSI standard A117.1
- This product is manufactured in an ISO 9001, ISO 14001 facility
- UL certified environmental product declaration

CAUTION: Door Closers for Low Opening Force Applications:
Door closers installed in openings required to meet the requirements of the Americans With Disabilities Act or ANSI/BHMA Standard A117.1, when adjusted to meet those requirements, may not provide adequate closing power to dependably close and latch the door based on opening or site conditions.

EXPLANATION OF FEATURES

Aluminum Alloy Housing

Closer bodies are constructed of a special aluminum alloy, carefully selected to accommodate interactive steel components and operating conditions.

Rack & Pinion Operation

Provides a smooth constant control of the door through its full opening and closing cycle. 180° door swing can be achieved when door, frame, hardware and arm function do not interfere.

Non-handed

With few exceptions all series 8301/ 8501 door closers are non-handed and can be installed on either right- or left-hand swing doors. Pinion shaft extends vertically through the closer body in both directions. Some options will require that the hand of the closer be specified.

Sweep Speed Control Valve

Allows adjustment of door speed from the door's full open position down to approximately 10° from the closed position.

Latch Speed Control Value

Allows adjustment of door speed from approximately 10° down to the door's fully closed position.

Tri-Style®

8301/8501 comes with screws, brackets and soffit plates to allow for regular, top jamb, and parallel arm installations.

Adjustable Backcheck Cushion Valve

Provides control of the door in the opening cycle, beginning at approximately 75° of door opening. It cushions the door opening when the door is forcibly opened beyond its pre-adjusted limits.

Standard Molded Covers

Molded of high-impact U.L. listed material. These covers are non-handed for all applications.

Warranty

Limited 30-year warranty for defects and life of the building on the aluminum housing.

Closer Fluid

NorGlide® closer fluid is a specially formulated multi-viscosity hydraulic fluid that contains lubricity and anti-oxidation agents that provide optimum performance and efficiency. This fluid complements the interaction of the door closer's aluminum housing with its steel and brass components, while maintaining stable viscosity to allow the door closer to perform in temperatures ranging from extremely high to as low as -40° F.

DOOR CLOSER POWER OPTIONS

Series 8301/8501 Multi-Sized Door Closer

Adjustable through the power range of sizes 1 through 6; as outlined in ANSI/ BHMA specification A156.4 option PT 4H.

Closers will also comply with the opening force requirements as outlined in the Americans with Disabilities Act (ADA) and ANSI/BHMA standard A117.1 for interior doors.

Optional Metal Cover

This steel cover is non-handed for regular and parallel arm applications, but is handed for top jamb applications. Cover is available in sprayed or plated finishes.

Optional Architectural Covers *

Plastic

Architectural plastic covers are molded of high-impact U.L. listed material. They are non-handed and available in sprayed finishes.

Metal

The architectural metal covers are steel and non-handed for all applications. These covers are available in sprayed or plated finishes.

Optional ABS Cover

Consult factory for details

EXPLANATION OF FEATURES

Adjustable Delayed Action Closing
An optional hydraulic feature that adds a third speed range to the closing cycle. This feature becomes effective when the door is opened and released at any point beyond 70°. The amount of time delay depends upon the combination of the angle of door release and valve adjustment. The valve can be adjusted with a 1/8" (3mm) hex key from no delay time up to maximum delay times of:

Door Opened and Released at	Approximate Time of Delay Cycle
180°	4-5 minutes
120°	2-3 minutes
90°	25-30 seconds

Pressure Relief Safety Valve
The delayed action hydraulic system contains a pressure relief valve. Any time the door is forced toward the closed direction while it is in the closing cycle, the valve will open and permit the door to close. This prevents damage to door, frame and closer.

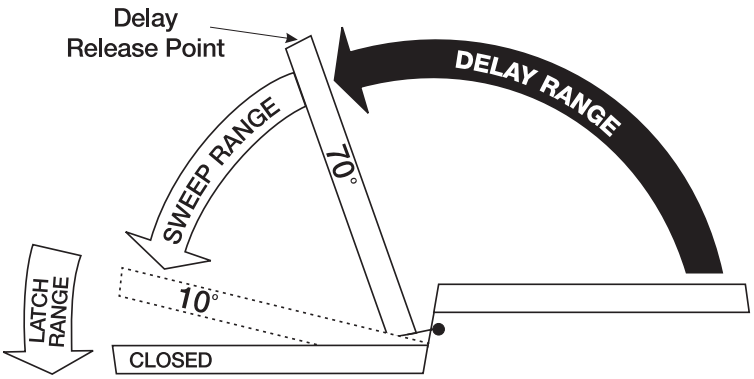

Suggested Applications
Delayed Action closing allows slow moving traffic to clear the opening before the door closer's normal closing cycle begins. This feature can be helpful in health care facilities such as hospitals and nursing homes. It provides sufficient time for persons on crutches or in wheelchairs to pass through a door without concern of it closing. At the same time, it can accommodate the facility's staff with movement of food service carts, beds, and other wheeled traffic.

Use of delayed action closers on many doors throughout industrial and commercial buildings can also assist the flow of traffic. Locations where additional time to clear the opening is advantageous are doors between office and factory/warehouse facilities, doors to workshops or laboratories, to kitchen and food processing areas, etc.

Non-Hold Open

Self-closes door every time door is opened. Auxiliary stop (by others) required except when using the CloserPlus®, CloserPlus Spring™ or Unitrol® arms.

Hold Open

Achieved by means of friction or ball and detent/ roller. Friction hold open has a range of 90° to 180° using template location and mechanical adjustment.

Ball and detent or roller hold open is effective in a range of 85° to 110°.

Hold open arm door closers are not permitted to be used on fire door assemblies.

Door Opening Degrees

Arm Function	Regular Top Jamb Parallel Arm	Parallel Rigid Arm	CloserPlus® Parallel Arm	CloserPlus Spring™ Parallel Arm	Unitrol® Parallel Arm	Unitrol® Top Jamb	Low Profile Regular, Parallel	Slide Track
Non-Hold Open	✓	✓	85° to 110°	85° to 110°	85° to 110°	85° to 110°	✓	85° to 110°/180°
Hold Open	90° to 180°	85° to 180°	85° to 110°	85° to 110°	85° to 180°	85° to 180°	N/A	85° to 110°

✓=180° trim and template permitting

SUGGESTED SPECIFICATIONS

8301/8501 Series

Closers for interior and exterior doors shall be full rack-and-pinion type with cast aluminum alloy shell. Closers shall be surface mounted and shall project no more than 2-1/8" from the surface of the door with standard cover. Closers shall be non-handed to permit installation on doors of either hand. Closer fluid shall contain lubricity and anti-oxidation agents. Closer fluid shall maintain stable viscosity to allow door closer to perform in temperatures ranging from extremely high to as low as -40°F. Closers shall have multi-size spring power adjustment to permit setting of spring from size 1 through size 6. Closers shall have two non-critical valves, hex key adjusted, to independently regulate sweep speed and latch speed. Closers shall have adjustable backcheck intensity controlled by a hex key adjusted valve.

[Closers shall have adjustable delayed action closing controlled by a hex key adjustable valve.]

Regular arm and top jamb closers shall have a non-hold open shoe permitting 15% (+ or – 7-1/2%) power adjustment. **Closers shall be enclosed in a [molded resin cover] [plated or sprayed metal cover], Closers to be Norton® [8301/8501] [8501M] [8501MA] [8501A].

**For special arms insert the appropriate specification from column three on this page.

****Unitrol® Arm**

Door closers shall have a fixed door stop feature effective at one point selected at installation, from 85° - 110° in five-degree increments.

Door stop shall be cushioned by a shock-absorbing heavy-duty spring action effective at the [soffit plate] [arm shoe] pivot. [Closers shall be provided for parallel arm installation using a rigid steel main arm and secondary arm lengths proportional to the door width.] [Closers shall be provided for top jamb installation using a forged steel, rigid main arm and telescoping secondary arm adequate for the frame reveal of the openings.]

****CloserPlus® Arm**

Door closers shall have a field reversible door stop. Door closer shall have a feature with selectable on and off ball and detent hold open. Hold open tension shall be adjustable effective at one point selected at installation, from 85° - 110° in five degree increments. [Hold open mechanism shall have engage/disengage selection actuated by thumbturn]. Closers shall be provided for parallel arm installation using a forged rigid steel main arm and secondary arm.

****CloserPlus Spring™ Arm**

Door closers shall have built-in door stop [and holder] effective at one point selected at installation, from 85° - 110° in five-degree increments. Door stop mechanism shall be reversible and have a buffer spring that engages prior to the dead stop feature, reducing shock loads to the door and frame assembly. Door stop mechanism shall be non-handed and attached to soffit plate. [Hold open mechanism shall have engage/disengage selection actuated by thumbturn]. Closers shall be provided for parallel installation using a forged rigid steel main arm and secondary arm.

APPLICATIONS

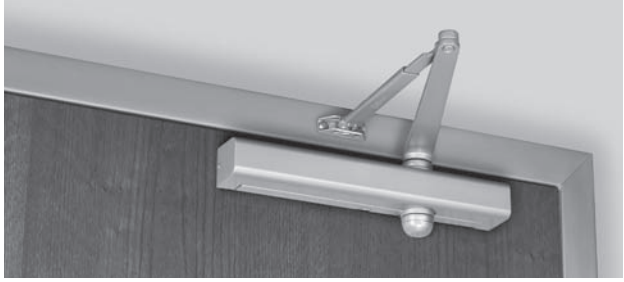

8301 - slim cover

Regular Arm
This is the only pull side application where a double lever arm is used. It is the most power-efficient application for a door closer. Sufficient frame, door and/or ceiling clearance must be considered.

8501 - full cover

Since the arm assembly projects directly out from the frame, this application may present an aesthetics issue or be prone to vandalism.

Top Jamb
For efficiency reasons this application provides the best alternative to the regular arm application. There must be sufficient frame face and/or ceiling clearance for this application. It requires a top rail on the door of just 2-1/4" (57mm). This application provides the best door control for doors in exterior walls that swing out of a building.

The entire door closer and arm assembly project from the frame, similar to the regular arm application, where matters of appearance and malicious abuse can be of concern. Consideration must be given to depth of frame reveal.

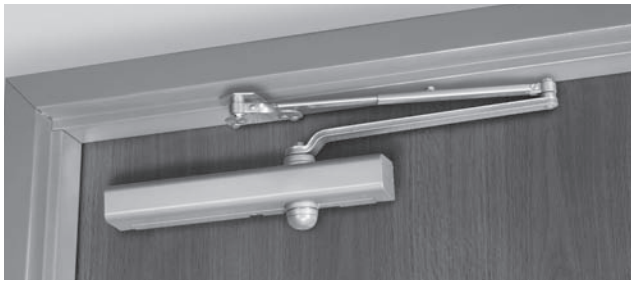

Parallel Arm
This application provides the most appealing design appearance for a surface mounted door closer having a double lever arm. This also makes it beneficial in vandalism-prone areas. It is on the push side of the door and the arm assembly extends almost parallel to the door. In the closed position, there is very little or no hardware projecting beyond the frame face in most situations.

Due to the geometry of the arm it is approximately 25% less power efficient than a regular arm application. The entire closer and arm assembly are mounted below the frame stop. Top rail clearance dimensions will vary based on the type of cover used.

APPLICATIONS

Non-hold open arm shown

Parallel Rigid Arm

An enhanced variation of the standard parallel arm assembly that is intended for use in heavy traffic areas where auxiliary door stops are installed.

Hold open available - specify hand when ordering.

Non-hold open arm shown

CloserPlus® Arm

Similar to the Parallel Rigid arm, this arm incorporates a stop at the arm's soffit plate to dead stop the door at a predetermined degree of door swing between 85° to 110°, in 5° increments. Prior to dead stop the door closer's backcheck feature slows the door speed to reduce the impact of the stop action.

The CloserPlus Arm is intended for use where an auxiliary door stop cannot be utilized and no more than moderate abuse is anticipated. Where more extreme conditions are expected, use of a Unitrol arm is recommended.

Available with or without hold open. (Hold open strength is adjustable.)

Non-hold open arm shown

CloserPlus Spring™

This arm has all the characteristics of the CloserPlus arm with an additional steel buffer spring that provides greater protection at the end of the door opening cycle.

For extreme conditions, use of a Unitrol arm is recommended. Available with or without hold open.

CloserPlus Ramp™

The CLP-R uses a patent pending ramp and plunger design that easily slides into place reducing wear often seen on traditional hold open arms. Ideal for applications where the door will constantly be pulled out of hold open.

APPLICATIONS

Regular Rigid Arm

This double lever arm features a non-adjustable secondary arm. Orbitally riveted joints prevent tampering or disassembly. Prefix "R" to model number. Available non-hold open only.

Non-hold open arm shown

Parallel Rigid Offset Arm

This heavy-duty parallel rigid arm provides additional vertical clearance. It is well suited for applications where weather stripping or other hardware prevents the use of the standard Parallel Rigid (PR) soffit plate. The non-hold open and hold arms allow 1-1/4" clearance. When used in conjunction with a 6891 spacer block, the PRO arm provides 1-7/8" clearance to accommodate the use of a surface overhead stop/holder.

Parallel

Top Jamb

Unitrol® Arm

Can be used for either parallel arm or top jamb applications. Unitrol arms combine the features of a double lever arm overhead door stop/holder with the backcheck feature of the door closer to reduce door stopping shock loads to a minimum. The Unitrol uses a compression spring buffer at the soffit plate/arm shoe that will absorb 30 lbs. of force, 5° prior to the door's dead stop. Coupled with the door closer's backcheck feature, this arm provides the most controlled stop available with a surface door closer.

For parallel arm applications there are three different length arm assemblies. Each length is designed for a specific range of door widths, to provide precise door control. This further lessens the dead stop impact on the door's hinges/pivots.

Only available in painted finishes.

APPLICATIONS

Pull Side

Low Profile Pull Side

Push Side

Low Profile Push Side

Slide Track

Whether pull or push side mounted, slide track applications provide the designer with the smoothest lines available in a surface mounted door closer. The single lever arm allows components to be located in a stack configuration to minimize projection and eliminate obtrusive arm angles. The arm geometry reduces door closer power efficiency by approximately 25% from that of a regular arm.

Standard Unit

Adjustable 85° to 110° (hold open and non-hold open). Track is supplied with a spring buffered stop. An auxiliary stop, by others, is recommended.

- Specify if hold open unit is required.
- 180° swing (non-hold open, pull side only) is also available. This track assembly requires that a door stop, by others, be supplied to stop the door.

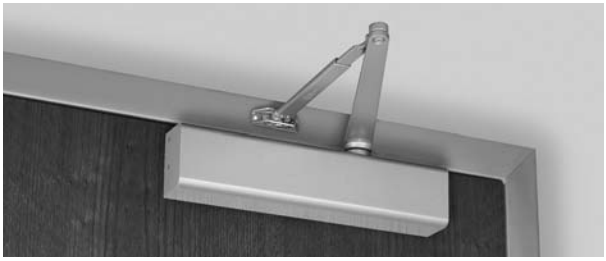

Regular Arm - Regular Arm allows closer to be installed where there is as little as 1" (25mm) of frame face or ceiling clearance.

Parallel Arm - Parallel Arm allows closer to be installed 1/2" (13mm) higher up on door than standard parallel arm application.

Low Profile Arm

Supplied with 8381/8581 series door closers for non-hold open installations only. Low profile arms have a reduced height elbow joint and a straight main arm. This enables the door closer to be installed in less vertical space.

- **Note:** Low profile arm door closers are not supplied with Tri-Style® packaging.

REGULAR ARM

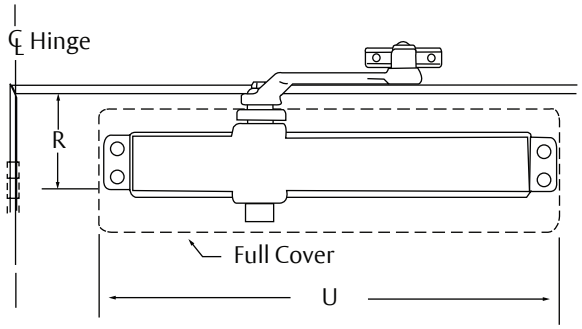

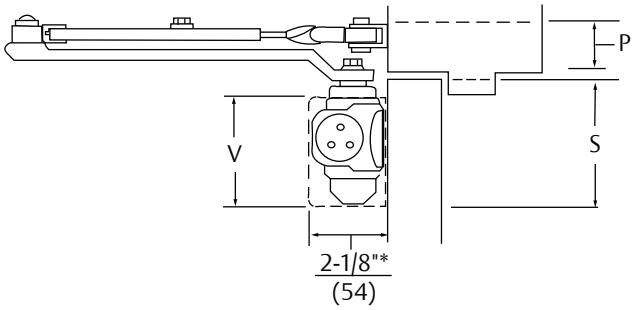

Mounting holes for closer body are spaced 3/4" (19mm) vertically x 12" (305mm) horizontally.

* Projection is for Slim Line or Full Covers. Projection for Metal Covers = 2-3/16" (56mm). Projection for Architectural Plastic & Architectural Metal Covers = 2-1/4" (57mm).

Closer Series	Covers	P Minimum Ceiling Clearance			R Minimum Top Rail				S Minimum Top Rail Clearance		U Closer Length	V Closer Height
					W/O Drop Plate		W/8146 Drop Plate					
		NHO	Low Profile	HO	NHO	Low Profile	NHO	Low Profile	NHO	Low Profile		
8101	No Cover	1-1/2" (38)	1" (25)	1-5/8" (41)	2-1/2" (64)	2-3/8" (60)	1-5/8" (41)	1-1/2" (38)	3-1/2" (89)	3-3/8" (86)	12-3/4" (324)	2-7/8" (73)
8301	Slim Line Plastic										13" (330)	
8501	Full Plastic											
8501M	Metal								4-1/4" (108)	4-1/8" (105)	13-5/8" (346)	3-3/4" (95)
8501A	Arch. Plastic								3-5/8" (92)	3-1/2" (89)	14" (356)	3-1/8" (79)
8501MA	Arch. Metal								3-1/2" (89)	3-3/8" (86)		3" (76)

Model Number	
Non-Hold Open	Hold Open
8301 8501	8301H 8501H

Notes:

- Door closers are set at midpower range from the factory
- Measurements are inches/mm unless noted
- Standard door widths: 30"-48" (76-122cm)

TOP JAMB ARM

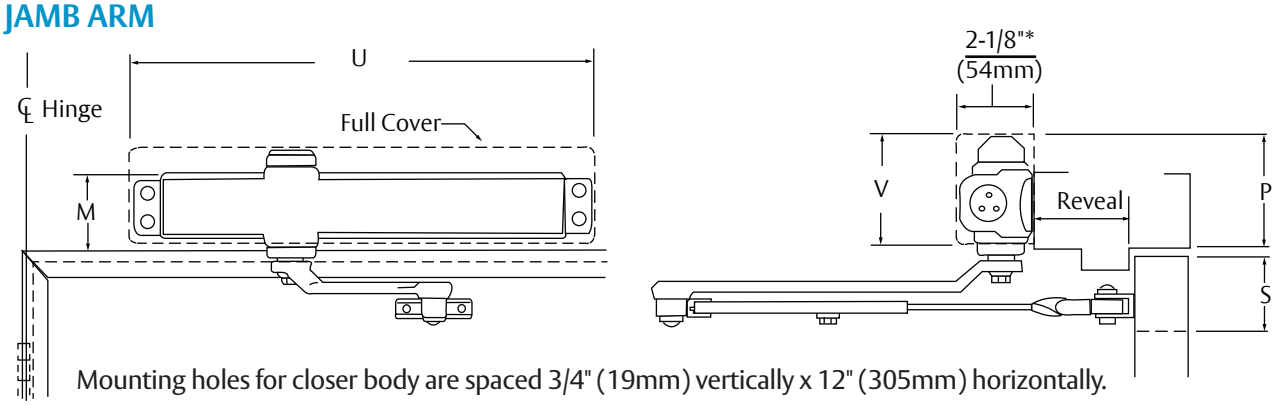

Mounting holes for closer body are spaced 3/4" (19mm) vertically x 12" (305mm) horizontally.

* Projection is for Slim Line or Full Covers. Projection for Metal Covers = 2-3/16" (56mm). Projection for Architectural Plastic & Architectural Metal Covers = 2-1/4" (57mm).

Closer Series	Covers	M Minimum Frame Face			P Minimum Ceiling Clearance			S Minimum Top Rail Clearance 5/8" (16mm) Frame Stop									U Closer Length	V Closer Height
								W/O Drop Plate			W/8146 Drop Plate			With 8148/8547 Drop Plate				
		W/O Drop Plate	With 8146 Drop Plate	With 8148, 8158, 8547, 8547A Drop Plate	W/O Drop Plate	With 8146 Drop Plate	With 8148, 8158, 8547, 8547A Drop Plate	NHO	Low Profile	HO	NHO	Low Profile	HO	NHO	Low Profile	HO		
8101	No Cover	1-3/4" (40)	1-1/8" (29)	1-1/2" (38)	2-3/4" (70)	1-5/8" (41)	1-1/2" (38)	2-1/4" (57)	N/A	2-1/2" (64)	3-3/8" (86)	2-3/4" (70)	3-5/8" (92)	4-3/8" (111)	3-3/4" (95)	4-5/8" (117)	12-3/4" (324)	2-7/8" (73)
8301	Slim Line Plastic																13" (330)	
8501	Full Plastic																	
8501M	Metal		N/A	1-5/8" (41)	3-3/4" (95)	N/A	1-5/8" (41)										13-5/8" (346)	3-3/4" (95)
8501A	Arch. Plastic			1-1/2" (38)	3" (76)		1-1/2" (38)										14" (356)	3-1/8" (79)
8501MA	Arch. Metal				2-7/8" (73)													3" (76)

Model Number	
Non-Hold Open	Hold Open
8301 8501	8301H 8501H

Notes:

- Door closers are set at midpower range from the factory
- Measurements are inches/mm unless noted
- Standard door widths: 30"-48" (76-122cm)
- Reveal range information is based upon 1-3/4" (44) doors hung on 4-1/2" wide hinges

Reveal Information

Model Number	Reveal Range Inches (mm)	Maximum Door Opening	
		NHO	HO
J8301, J8501	2-3/4" (70) to 4-1/4" (108)	180°	
J8301, J8501	4-1/4" (108) to 7" (178)	150°	
J8301H, J8501H	2-1/8" (54) to 4-1/4" (108)		180°
J8301H, J8501H	4-1/4" (108) to 6-3/4" (171)		150°

Reveal Information (regular arm installed top jamb)

Model Number	Reveal Range Inches (mm)	Maximum Door Opening	
		NHO	HO
8301, 8501	0 to 2-7/8" (73)	180°	—
8301, 8501 w/Drop Plate^^	0 to 2-3/4" (70)	180°	
8301H, 8501H	0 to 2-3/4" (70)		180°

^^ Drop plate 8146, 8148, 8158, 8547 or 8547A

PARALLEL ARM

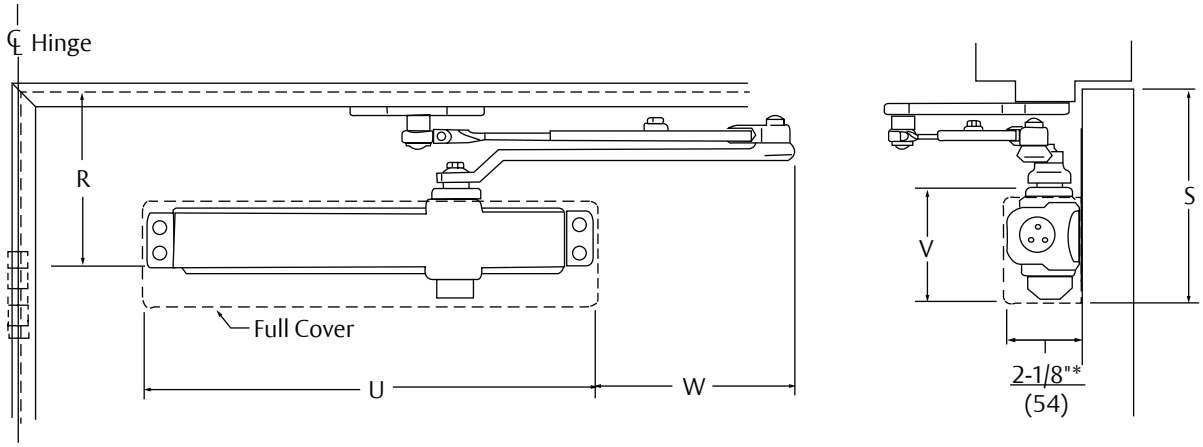

Mounting holes for closer body are spaced 3/4" (19mm) vertically x 12" (305mm) horizontally.

* Projection is for Slim Line or Full Covers. Projection for Metal Covers = 2-3/16" (56mm). Projection for Architectural Plastic & Architectural Metal Covers = 2-1/4" (57mm).

Closer Series	Covers	R Minimum Top Rail Minimum Top Rail 5/8" (16mm) Frame Stop						S Minimum Top Rail Clearance			U Closer Length	V Closer Height	W Arm Extension
		W/O Drop Plate			With 8148, 8158, 8548, 8548A Drop Plate								
		NHO	Low Profile	HO	NHO	Low Profile	HO	NHO	Low Profile	HO			
8101	No Cover	5-1/4" (133)	4-5/8" (117)	5-1/4" (133)	3" (76)	2-3/8" (60)	3" (76)	6-1/4" (159)	5-5/8" (143)	6-1/4" (159)	12-3/4" (324)	2-7/8" (73)	8-1/8" (206)
8301	Slim Line Plastic										13" (330)		8" (203)
8501	Full Plastic												
8501M	Metal							6-7/8" (175)	6-1/4" (159)	6-7/8" (175)	13-5/8" (346)	3-3/4" (95)	7-5/8" (194)
8501A	Arch. Plastic							6" (152)	5-3/8" (137)	6" (152)	14" (356)	3-1/8" (79)	
8501MA	Arch. Metal							5-7/8" (149)	5-1/4" (133)	5-7/8" (149)		3" (76)	

Model Number	
Non-Hold Open	Hold Open
8301 8501	8301H 8501H

Notes:

- Door closers are set at midpower range from the factory
- Measurements are inches/mm unless noted
- Standard door widths: 30"-48" (76-122cm)

PARALLEL RIGID ARM

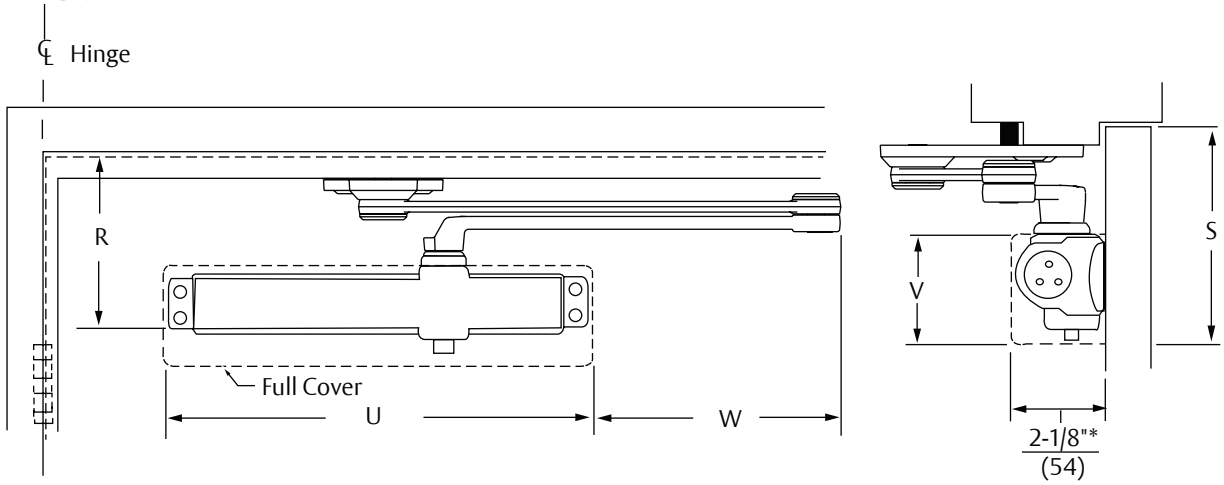

Mounting holes for closer body are spaced 3/4" (19mm) vertically x 12" (305mm) horizontally.

* Projection is for Slim Line or Full Covers. Projection for Metal Covers = 2-3/16" (56mm). Projection for Architectural Plastic & Architectural Metal Covers = 2-1/4" (57mm).

Closer Series	Covers	R Minimum Top Rail		S Minimum Top Rail Clearance	U Closer Length	V Closer Height	W Arm Extension
		W/O Drop Plate	With Drop Plate				
8101	No Cover	4-5/8" (117)	2-3/8" (60)	5-7/8" (149)	12-3/4" (324)	2-7/8" (73)	8" (203)
8301	Slim Line Plastic				13" (330)		
8501	Full Plastic						
8501M	Metal			6-1/2" (165)	13-5/8" (346)	3-7/8" (98)	7-5/8" (194)
8501A	Arch. Plastic			6" (152)	14" (356)	3-1/8" (79)	7-1/2" (191)
8501MA	Arch. Metal			5-7/8" (149)		3" (76)	

Model Number	
Stop Only	Hold Open
PR8301 PR8501	PR8301H PR8501H

Notes:

- Door closers are set at midpower range from the factory
- Measurements are inches/mm unless noted
- Standard door widths: 28"-48" (71-122cm)

CLOSERPLUS® ARM

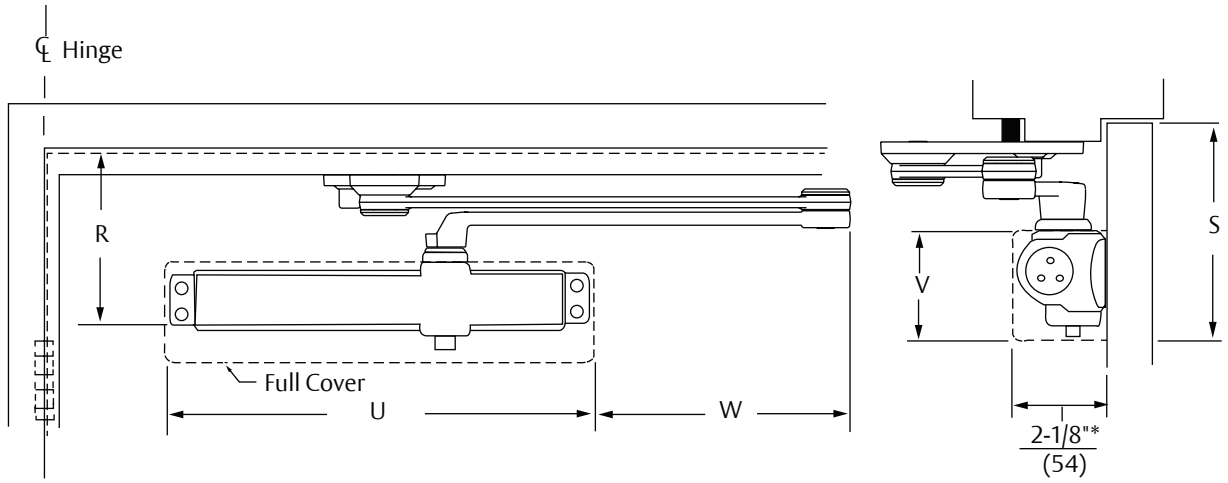

Mounting holes for closer body are spaced 3/4" (19mm) vertically x 12" (305mm) horizontally.

* Projection is for Slim Line or Full Covers. Projection for Metal Covers = 2-3/16" (56mm). Projection for Architectural Plastic & Architectural Metal Covers = 2-1/4" (57mm).

Closer Series	Covers	R Minimum Top Rail		S Minimum Top Rail Clearance	U Closer Length	V Closer Height	W Arm Extension
		W/O Drop Plate	With Drop Plate				
8101	No Cover	4-5/8" (117)	2-3/8" (60)	5-7/8" (149)	12-3/4" (324)	2-7/8" (73)	8" (203)
8301	Slim Line Plastic				13" (330)		
8501	Full Plastic						
8501M	Metal			6-1/2" (165)	13-5/8" (346)	3-7/8" (98)	7-5/8" (194)
8501A	Arch. Plastic			6" (152)	14" (356)	3-1/8" (79)	7-1/2" (191)
8501MA	Arch. Metal			5-7/8" (149)		3" (76)	

Model Number		
Stop Only	Thumbturn Hold Open	Ramp Hold Open
CLP8301 CLP8501	CLP8301T CLP8501T	CLP8301R CLP8501R

Notes:

- Door closers are set at midpower range from the factory
- Measurements are inches/mm unless noted
- Standard door widths: 28"-48" (71-122cm)

CLOSERPLUS SPRING™ ARM

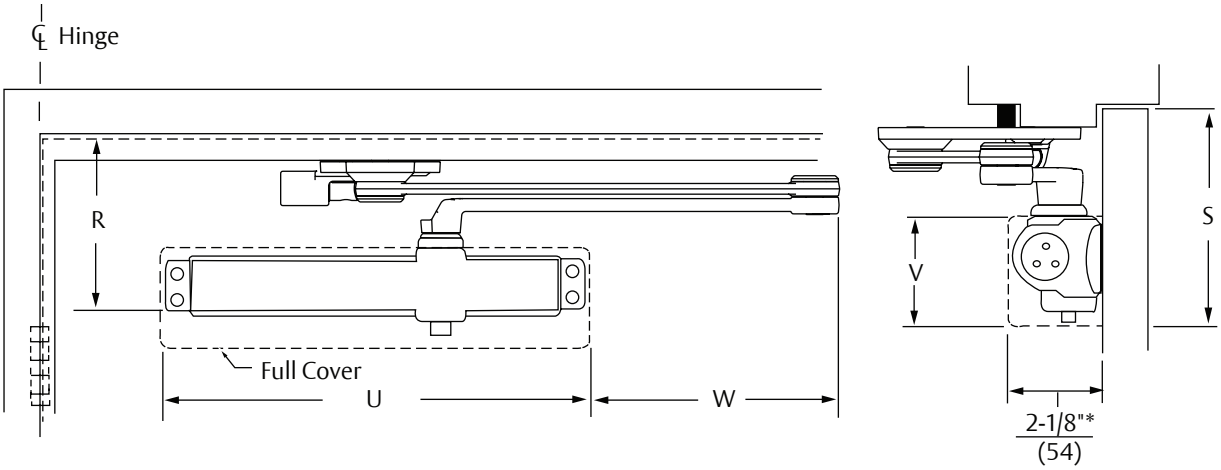

Mounting holes for closer body are spaced 3/4" (19mm) vertically x 12" (305mm) horizontally.

* Projection is for Slim Line or Full Covers. Projection for Metal Covers = 2-3/16" (56mm). Projection for Architectural Plastic & Architectural Metal Covers = 2-1/4" (57mm).

Closer Series	Covers	R Minimum Top Rail		S Minimum Top Rail Clearance	U Closer Length	V Closer Height	W Arm Extension
		W/O Drop Plate	With Drop Plate				
8101	No Cover	4-5/8" (117)	2-3/8" (60)	5-7/8" (149)	12-3/4" (324)	2-7/8" (73)	8" (203)
8301	Slim Line Plastic				13" (330)		
8501	Full Plastic						
8501M	Metal			6-1/2" (165)	13-5/8" (346)	3-7/8" (98)	7-5/8" (194)
8501A	Arch. Plastic			6" (152)	14" (356)	3-1/8" (79)	7-1/2" (191)
8501MA	Arch. Metal			5-7/8" (149)		3" (76)	

Model Number	
Stop Only	Hold Open
CPS8301 CPS8501	CPS8301T CPS8501T

Notes:

- Door closers are set at midpower range from the factory
- Measurements are inches/mm unless noted
- Standard door widths: 28"-48" (71-122cm)

REGULAR RIGID HEAVY-DUTY ARM

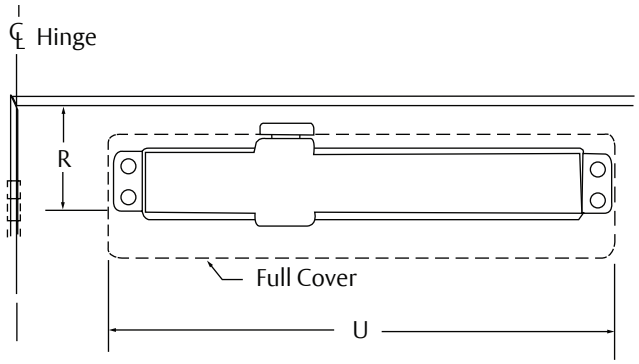

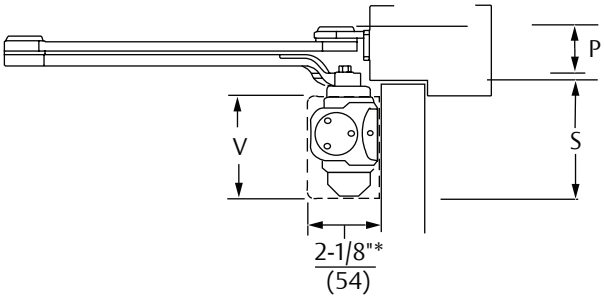

Mounting holes for closer body are spaced 3/4" (19mm) vertically x 12" (305mm) horizontally.

* Projection is for Slim Line or Full Covers. Projection for Metal Covers = 2-3/16" (56mm). Projection for Architectural Plastic & Architectural Metal Covers = 2-1/4" (57mm).

Closer Series	Covers	P Minimum Ceiling Clearance	R Minimum Top Rail		S Minimum Top Rail Clearance	U Closer Length	V Closer Height
			W/O Drop Plate	W/8146 Drop Plate			
		NHO	NHO	NHO	NHO		
8101	No Cover	1-3/4" (44)	2-1/2" (64)	1-5/8" (41)	3-1/2" (89)"	12-3/4" (324)	2-7/8" (73)
8301	Slim Line Plastic					13" (330)	
8501	Full Plastic						
8501M	Metal				4-1/4" (108)	13-5/8" (346)	3-3/4" (95)
8501A	Arch. Plastic				3-5/8 (92)	14" (356)	3-1/8" (79)
8501MA	Arch. Metal				3-1/2" (89)		3" (76)

Model Number
Non-Hold Open Only
R8301 R8501

Notes:

- Door closers are set at midpower range from the factory
- Measurements are inches/mm unless noted
- Standard door widths: interior – 36"-54" (91-137cm)
  exterior – 30"-52" (76-132cm)

PARALLEL RIGID OFFSET ARM

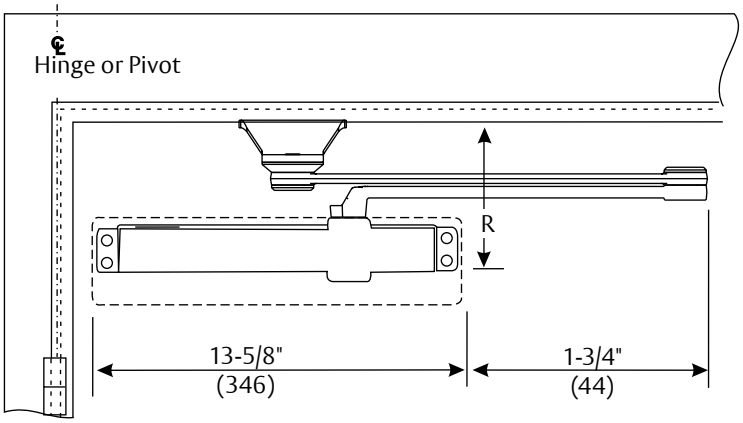

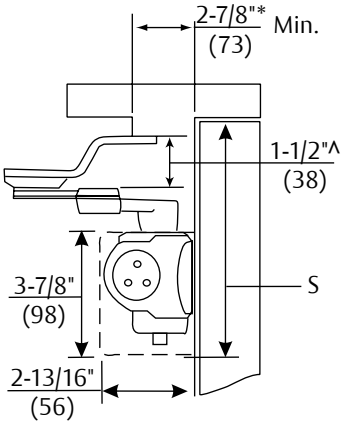

Mounting holes for closer body are spaced 2-3/8" (60mm) vertically x 6-3/4" (171mm) horizontally.
^ If clearance greater than 1-1/2" is needed, 6891 spacer block is required.

* Projection is for Slim Line or Full Covers. Projection for Metal Covers = 2-3/16" (56mm). Projection for Architectural Plastic & Architectural Metal Covers = 2-1/4" (57mm).

R (inches/mm) Minimum Top Rail of Door with 5/8" (16mm) Frame Stop		S Minimum Top Rail of Door	
Without 6891 Spacer	With 6891 Spacer	Without 6891 Spacer	With 6891 Spacer
7-1/8" (181)	7-5/8" (194)	7-5/8" (194)	8-1/8" (206)

Model Number	
Non-Hold Open	Hold Open
PRO8301 PRO8501	PRO8301H PRO8501H

Notes:

- Door closers are set at midpower range from the factory
- Closers with hold open arms are handed. Specify when ordering.
- Measurements are inches/mm unless noted
- Standard door widths: interior 30"-48" (76-122cm)
  exterior 32-48" (81-122cm)

PARALLEL UNITROL® ARM

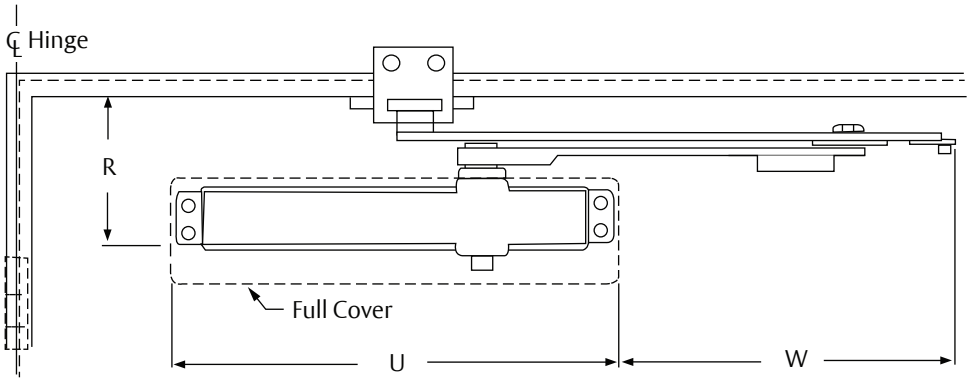

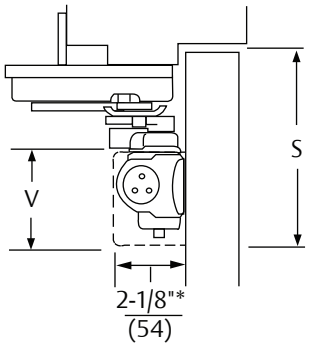

Mounting holes for closer body are spaced 3/4" (19mm) vertically x 12" (305mm) horizontally.

*Projection is for Slim Line or Full Covers. Projection for Metal Covers = 2-3/16" (56mm). Projection for Architectural Plastic & Architectural Metal Covers = 2-1/4" (57mm).

Closer Series	Door Width	Covers	R Minimum Top Rail		S Minimum	U Closer Length	V Closer Height	W Arm Extension
			W/O Drop Plate	With Drop Plate				
8301	28"-32"	Slim Line	4-3/4" (121)	2-1/2" (64)	5-3/4" (146)	13" (330)	2-7/8" (73)	8-3/8" (213)
	33"-41"							9-7/8" (251)
	42"-48"							11-1/4" (286)
8501	33"-41"^	Full Plastic						9-7/8" (251)
8501M		Metal			6-3/8" (162)	13-5/8" (346)	3-7/8 (98)	9-1/2" (241)
8501A		Arch. Plastic			5-1/2" (140)	14" (356)	3-1/8" (79)	9-3/8" (238)
8501MA		Arch. Metal			5-3/8" (137)		3" (76)	9" (229)

^ Consult installation instructions for additional door width dimensions.

Model Number		
Stop Only	Hold Open	x Specify Door Width
UNI8301 UNI8501	UNI8301H UNI8501H	

Notes:

- Door closers are set at midpower range from the factory
- Measurements are inches/mm unless noted
- Standard door widths: 28"-48" (71-122cm)

TOP JAMB UNITROL® ARM

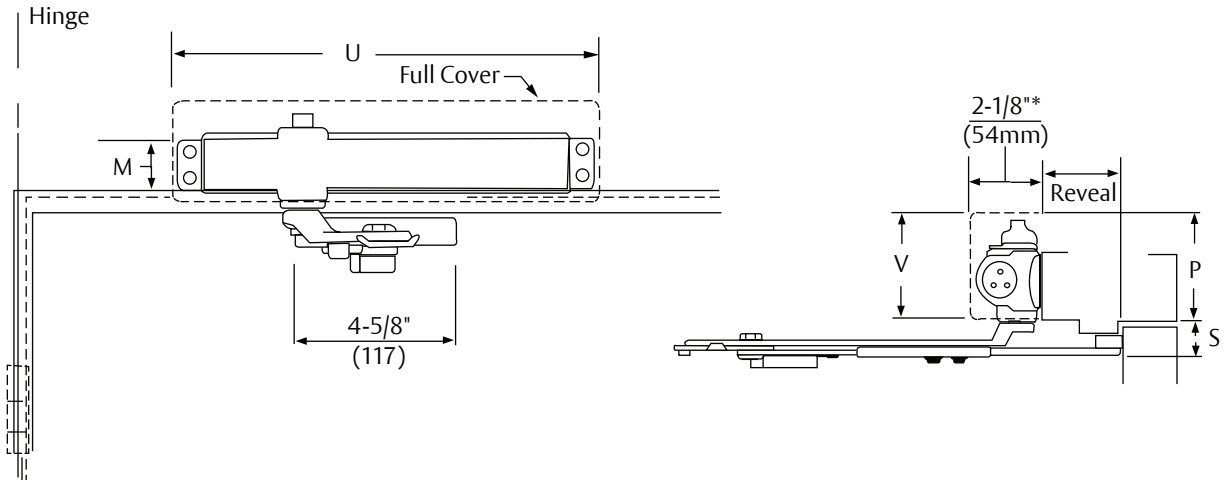

Mounting holes for closer body are spaced 3/4" (19mm) vertically x 12" (305mm) horizontally.

* Projection is for Slim Line or Full Covers. Projection for Metal Covers = 2-3/16" (56mm). Projection for Architectural Plastic & Architectural Metal Covers = 2-1/4" (57mm).

Closer Series	Covers	R Minimum Top Rail		P Minimum Ceiling Clearance		S Minimum Top Rail Clearance		U Closer Length	V Closer Height
		W/O Drop Plate	With 8148, 8158, 8547, 8547A Drop Plate	W/O Drop Plate	With Drop Plate	W/O Drop Plate	With 8148, 8158, 8547, 8547A Drop Plate		
8301	Slim Line	1-3/4" (44)	1-1/2" (38)	2-3/4" (70)	1-1/2" (38)	1-7/8" (48)	3-3/4" (95)	13" (330)	2-7/8" (73)
8501	Full								
8501M	Metal		1-5/8" (41)	3-3/4" (95)	1-5/8" (41)			13-5/8" (346)	3-7/8" (98)
8501A	Arch. Plastic		1-1/2" (38)	3" (76)	1-1/2" (38)			14" (356)	3-1/8" (79)
8501MA	Arch. Metal			2-7/8" (73)					

Model Number		
Non-Hold Open	Hold Open	
UNIJ8301 UNIJ8501	UNIJ8301H UNIJ8501H	x Specify Frame Reveal

Notes:

- Door closers are set at midpower range from the factory
- Measurements are inches/mm unless noted
- Standard door widths: 28"-48" (71-122cm)

PULL SIDE SLIDE TRACK

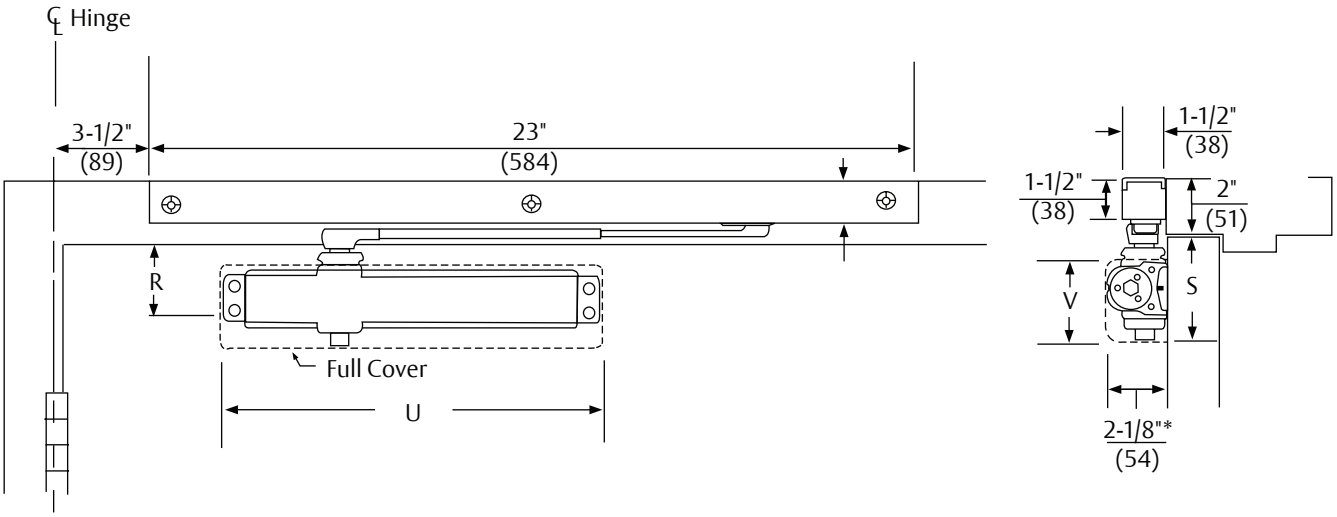

Mounting holes for closer body are spaced 3/4" (19mm) vertically x 12" (305mm) horizontally.

* Projection is for Slim Line or Full Covers. Projection for Metal Covers = 2-3/16" (56mm). Projection for Architectural Plastic & Architectural Metal Covers = 2-1/4" (57mm).

Closer Series	R Minimum Top Rail		S Minimum Top Rail Clearance				U Closer Length				V Closer Height			
	W/O Drop Plate	With 8146 Drop Plate	Slim or Full Cover	Metal Cover	Arch Plastic	Arch Metal	Slim or Full Cover	Metal Cover	Arch Plastic	Arch Metal	Slim or Full Cover	Metal Cover	Arch Plastic	Arch Metal
8301ST 8501ST	2-1/2" (64)	1-5/8" (41)	3-1/2" (89)	4-1/8" (105)	3-5/8" (92)	3-1/2" (89)	13" (330)	13-5/8" (346)	14" (356)		2-7/8" (73)	3-3/4" (95)	3-1/8" (79)	3" (76)

Model Number		
Non-Hold Open		Hold Open
85°-110°++	85°-180°~~	85°-110°~~
8301ST 8501ST	8301ST-180 8501ST-180	8301STH 8501STH

++ Track is furnished with a spring buffered stop. Additional stop, by others, is recommended where abusive conditions are anticipated.

~~ Track is supplied without the spring buffered assembly. An auxiliary door stop, by others, is required.

Notes:

- Door closers are set at midpower range from the factory
- Measurements are inches/mm unless noted
- Standard door widths: interior 32"-48" (81-122cm)
  exterior 32"-38" (81-97cm)

PUSH SIDE SLIDE TRACK

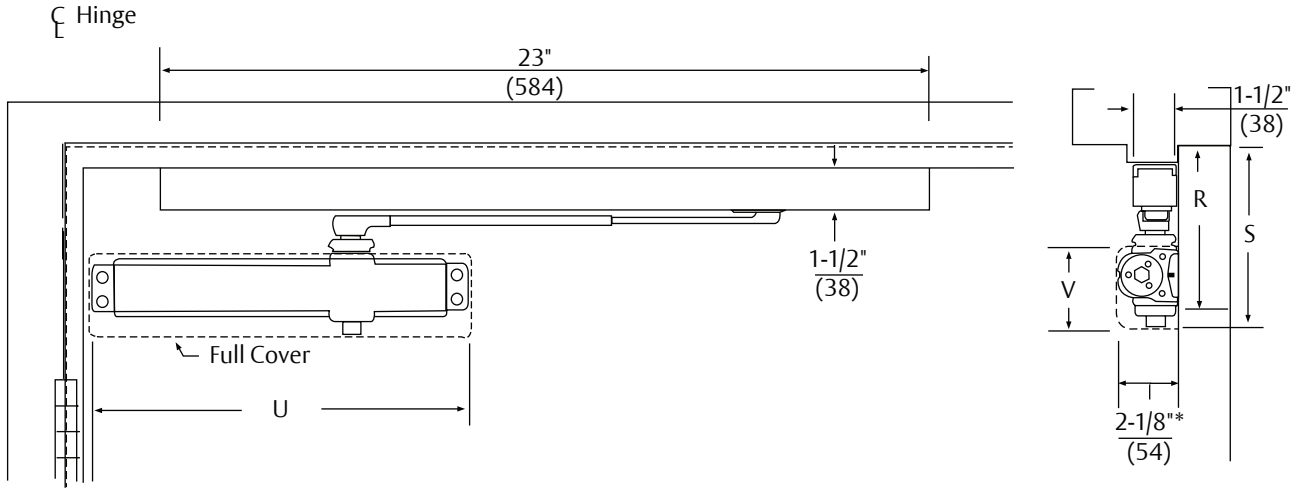

Mounting holes for closer body are spaced 3/4" (19mm) vertically x 12" (305mm) horizontally.

* Projection is for Slim Line or Full Covers. Projection for Metal Covers = 2-3/16" (56mm). Projection for Architectural Plastic & Architectural Metal Covers = 2-1/4" (57mm).

Closer Series	R Minimum Top Rail		S Minimum Top Rail Clearance				U Closer Length				V Closer Height			
	W/O Drop Plate	With 8146, 8158, 8548, 8548A Drop Plate	Slim or Full Cover	Metal Cover	Arch Plastic	Arch Metal	Slim or Full Cover	Metal Cover	Arch Plastic	Arch Metal	Slim or Full Cover	Metal Cover	Arch Plastic	Arch Metal
PS8301ST PS8501ST	5" (127)	2-3/4" (70)	6" (152)	6-5/8" (168)	6-1/8" (156)	6" (152)	13" (330)	13-5/8" (346)	14" (356)		2-7/8" (73)	3-3/4" (95)	3-1/8" (79)	3" (76)

Model Number	
Non-Hold Open	Hold Open
85°-110°	
PS8301ST PS8501ST	PS8301STH PS8501STH

Notes:

- Door closers are set at midpower range from the factory
- All track assemblies are supplied with a spring buffered stop
- A separate door stop, by others, is recommended where abusive conditions are anticipated
- Measurements are inches/mm unless noted
- Standard door widths: interior 32"-48" (81-122cm)
  exterior 32"-38" (81-97cm)

LOW PROFILE PULL SIDE SLIDE TRACK

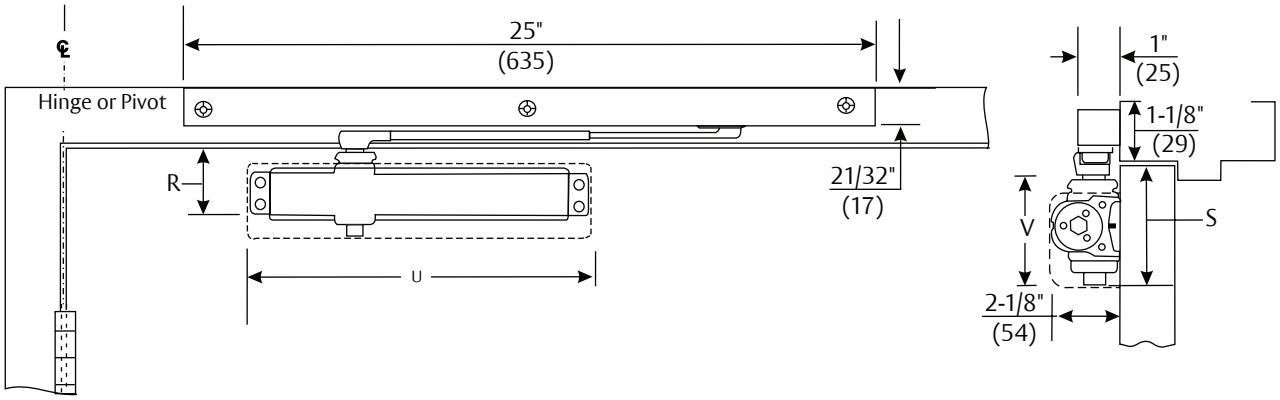

Mounting holes for closer body are spaced 3/4" (19mm) vertically x 12" (305mm) horizontally.

*Projection is for Slim Line or Full Covers. Projection for Metal Covers = 2-3/16" (56mm). Projection for Architectural Plastic & Architectural Metal Covers = 2-1/4" (57mm).

Closer Series	R Minimum Top Rail		S Minimum Top Rail Clearance				U Closer Length				V Closer Height			
	W/O Drop Plate	With 8146 Drop Plate	Slim or Full Cover	Metal Cover	Arch Plastic	Arch Metal	Slim or Full Cover	Metal Cover	Arch Plastic	Arch Metal	Slim or Full Cover	Metal Cover	Arch Plastic	Arch Metal
8341ST 8541ST	2-1/2" (64)	5/8" (16)	3" (76)	4-5/8" (117)	3-1/8" (79)	3" (76)	13" (330)	13-5/8" (346)	14" (356)		3" (76)	3-7/8" (98)	3-1/4" (83)	3-1/8" (79)

Model Number	
Non-Hold Open	Hold Open
8341ST 8541ST	8341STH 8541STH

Notes:

- Door closers are set at midpower range from the factory
- Measurements are inches/mm unless noted
- Standard door widths: **interior only** 32"-48" (81-122cm)

LOW PROFILE PUSH SIDE SLIDE TRACK

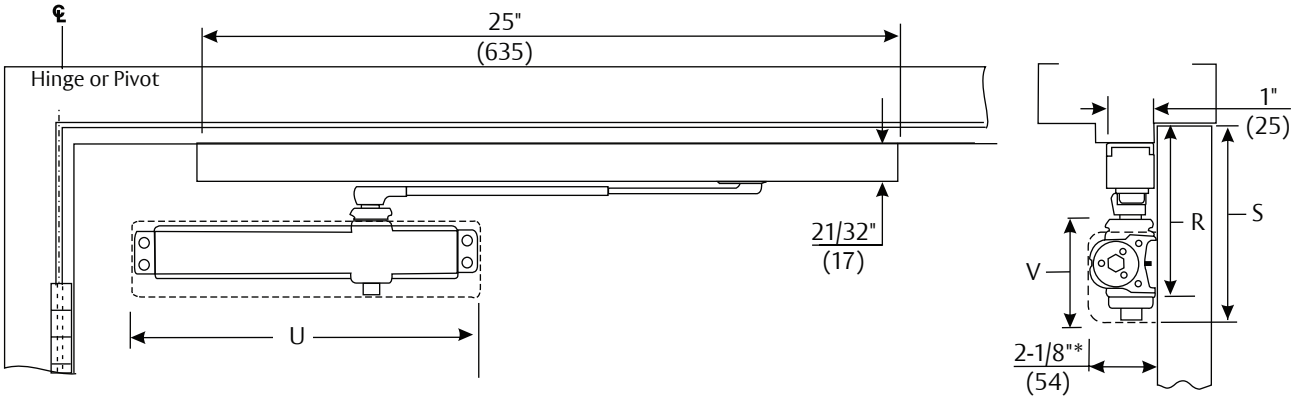

Mounting holes for closer body are spaced 3/4" (19mm) vertically x12" (305mm) horizontally.

*Projection is for Slim Line or Full Covers. Projection for Metal Covers = 2-3/16" (56mm). Projection for Architectural Plastic & Architectural Metal Covers = 2-1/4" (57mm).

Closer Series	R Minimum Top Rail		S Minimum Top Rail Clearance				U Closer Length				V Closer Height			
	W/O Drop Plate	With 8146, 8158, 8548, 8548A Drop Plate	Slim or Full Cover	Metal Cover	Arch Plastic	Arch Metal	Slim or Full Cover	Metal Cover	Arch Plastic	Arch Metal	Slim or Full Cover	Metal Cover	Arch Plastic	Arch Metal
PS8341ST PS8541ST	4" (102)	1-3/4" (44)	5" (127)	5-5/8" (143)	5-1/8" (130)	5" (127)	13" (330)	13-5/8" (346)	14" (356)		3" (76)	3-7/8" (98)	3-1/4" (83)	3-1/8" (79)

Model Number	
Non-Hold Open	Hold Open
PS8341ST PS8541ST	PS8341STH PS8541STH

Notes:

- Door closers are set at midpower range from the factory
- Measurements are inches/mm unless noted
- Standard door widths: **interior only** 32"-48" (81-122cm)

REGULAR ARM

Closer Mounting Plate Slim Line Installations

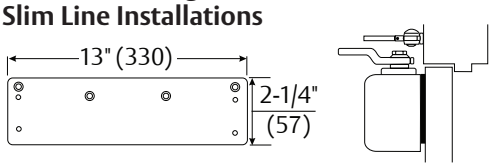

Narrow Top Rail - 8146 Drop Plate:

For use where the narrow top rail of the door prevents the closer from being mounted directly on to the door surface. This drop plate must be used for any Series 8000 closer mounted on a top rail between 1-9/16" and 2-7/16" (40 and 62mm) in height, or any Series 8080 closer mounted on a top rail between 1-7/16" and 2-5/16" (36 and 59mm) in height.

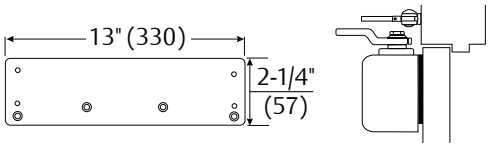

Concealed Door Holder - 8146 Drop Plate:

For use where a concealed door holder prevents normal mounting of the closer to the door. This is the same plate used for narrow rail mounting, but is inverted for this application to permit the mounting screws to clear the bottom of the door-holder preparation in the top rail of the door. This places the centerline of the plate's upper mounting screws at 2-3/16" (56mm) from the top of the door.

Full Cover Installations

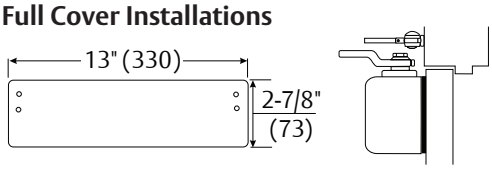

Exposed Back - 8445 Molded Full Cover Decorative Back Plate:

For use on doors with glass lights where a closer with a molded full cover is installed and the closer back is exposed. This plate covers the back of the installation to give a pleasing appearance from the reverse side.

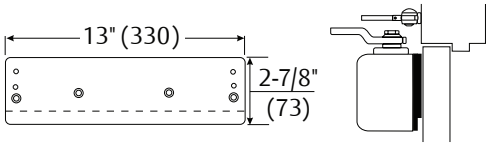

Exposed Back/Narrow Top Rail - Exposed Back Concealed Door Holder - 8446 Molded Full Cover Drop Plate Kit:

For use with molded full cover installation when an 8146 Plate is needed as a drop plate on a narrow top rail, or as a clearance plate for a concealed door holder, and the closer back is exposed. Kit contains an 8146 Drop Plate and an 8445 Decorative Plate.

Metal Cover Installations

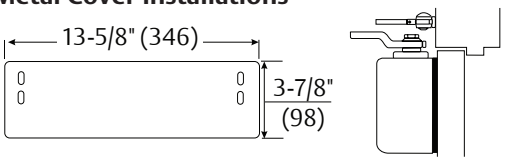

Exposed Back - 8545 Metal Cover Decorative Back Plate:

For use on doors with glass lights where a closer with a metal full cover is installed and the closer back is exposed. This plate covers the back of the installation to give a pleasing appearance from the reverse side.

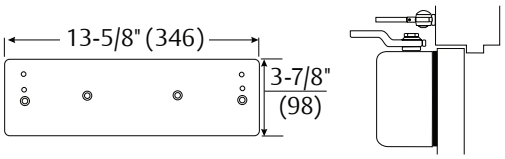

Concealed Door Holder - 8546 Metal Cover Drop Plate:

For uswhere a concealed door holder prevents the normal mounting of the closer to the door. This plate permits the mounting screws to clear the bottom of the door-holder preparation in the top rail of the door. This places the centerline of the plate's upper mounting screws at 2-3/16" (56mm) from the top of the door.

Exposed Back/Narrow Top Rail - 8549 Metal Cover Drop Plate Kit:

For use with metal full cover installations, when an 8146 Plate is needed as a drop plate on a narrow top rail and the closer back is exposed. Kit contains an 8146 Drop Plate and an 8545 Decorative Plate.

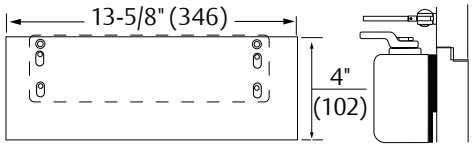

REGULAR ARM

Closer Mounting Plate
Architectural Plastic or Metal Cover Installations

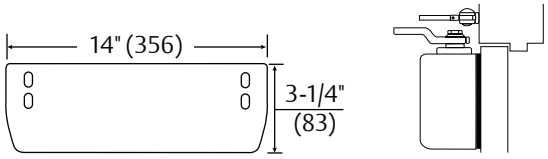

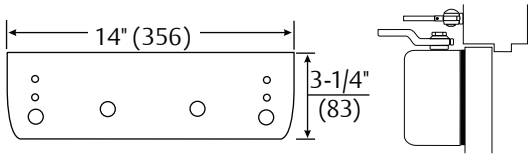

Exposed Back - 8545A Architectural Plastic or Architectural Metal Cover Decorative Back Plate:

For use on doors with glass lights where a closer with an architectural plastic or metal cover is installed and the closer back is exposed. This plate covers the back of the installation to give a pleasing appearance from the reverse side.

Concealed Door Holder - 8546A Architectural Plastic or Architectural Metal Cover Drop Plate:

For use where a concealed door holder prevents the normal mounting of the closer to the door. This plate permits the mounting screws to clear the bottom of door-holder preparation in the top rail of the door. This places the centerline of the plate's upper mounting screws at 2-3/16" (56mm) from the top of the door.

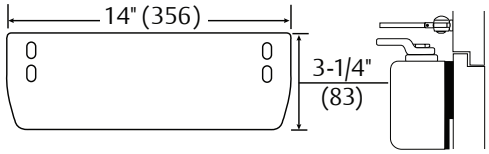

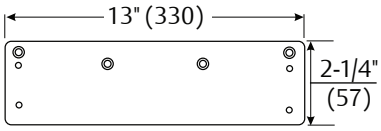

Exposed Back/Narrow Top Rail - 8549A Architectural Plastic or Architectural Metal Cover Drop Plate Kit:

For use with architectural plastic or metal cover installations when an 8146 plate is needed as a drop plate on a narrow top rail and the closer back is exposed. Kit contains an 8146 Drop Plate and an 8545A Decorative Plate.

REGULAR ARM

Brackets for Non-Hold Open Arms

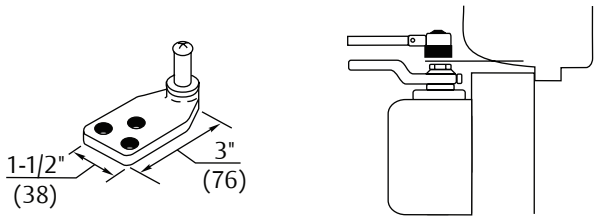

Molded/Bull Nose Trim - 2403B Bracket:

For use where the door frame has molded or bull nose trim which will not accept a standard non-hold open shoe. The bracket is mortised into the frame rabbet, and projects beyond the face of the frame. It will accommodate a frame rabbet up to 2" (51mm) deep.

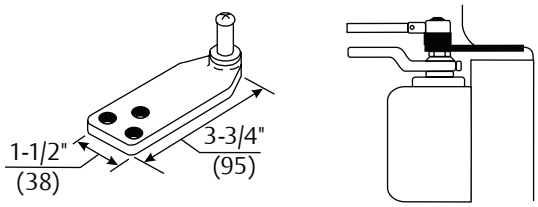

Molded / Bull Nose Trim - 2403-3/4 Bracket:

This bracket is similar to, but longer than, the 2403B bracket. It is designed to accommodate frame rabbets from 2" to 2-7/8" (51 to 73mm) deep.

Brackets for Non-Hold Open Arms

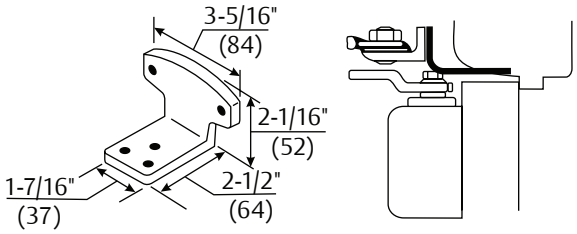

Molded / Bull Nose Trim - 80 Bracket:

For use where the door frame has molded or bull nose trim which will not accept a standard hold open shoe. It is mortised into the frame rabbet, and projects beyond the face of the frame. It will accommodate a rabbet up to 2" (51mm) deep. This bracket is used in combination with the standard hold-open mounting shoe.

TOP JAMB ARM

Closer Mounting Plates
Slim Line Installations

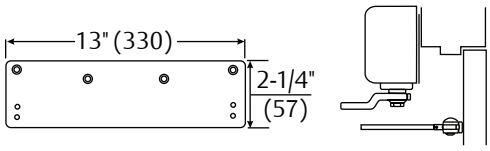

Low Ceiling Clearance - #8146 Drop Plate:

For use where low ceiling clearance prevents normal top jamb mounting. This plate is used when clearance is from 1-7/8" to 2-7/8" (48 to 73mm). Where ceiling clearance is less than 1-7/8" (48mm) see 8148 Drop Plate on page 28.

Overhead Door Holder - #146 Drop Plate:

For use where a surface or concealed overhead door holder prevents normal top jamb mounting. This plate drops the closer and allows arm mounting screws to clear the bottom of the door holder. This places the centerline of the arm mounting screws at 2-7/8" (73mm) from the top of the door.

TOP JAMB ARM

Closer Mounting Plates
Slim Line Installations

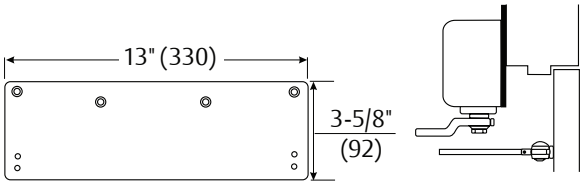

Low Ceiling Clearance - 8148 Drop Plate:

For use where the ceiling clearance is between 1-1/2" and 1-3/4" (38 and 44mm).

Metal Cover Installations

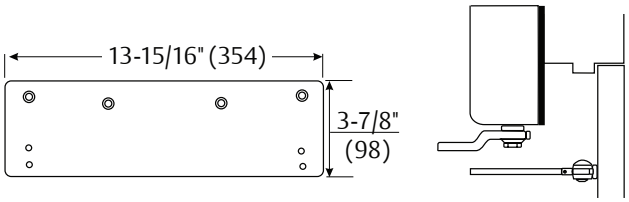

Low Ceiling Clearance - Overhead Door Holder - 8547 Metal Full Cover Drop Plate:

For use where a low ceiling clearance prevents normal top jamb mounting. This plate is used when the clearance is between 1-5/8" and 3-7/8" (41 and 98mm). Or for use where a surface or concealed overhead door holder prevents normal top jamb mounting of a closer with a metal full cover.

This plate drops the closer and allows arm mounting screws to clear the bottom of the door holder. This places the centerline of the arm mounting screws at 3-7/8" (98mm) from the top of the door.

Architectural Plastic or Metal Cover Installations

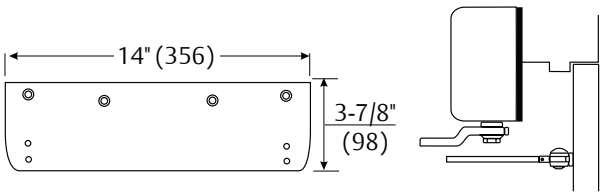

Low Ceiling Clearance - Overhead Door Holder - 8547A Architectural Plastic or Architectural Metal Cover Drop Plate:

For use where low ceiling clearance prevents normal top jamb mounting. This plate is used when the clearance is between 1-5/8" and 3-7/8" (41 and 98mm). Also for use where a surface or concealed overhead door holder prevents normal top jamb mounting of a closer with an architectural plastic or metal full cover. This plate drops the closer and allows arm mounting screws to clear the bottom of the door holder. This places the centerline of the arm mounting screws at 3-7/8" (98mm) from the top of the door.

PARALLEL ARM

Closer Mounting Plates
Slim Line Installations

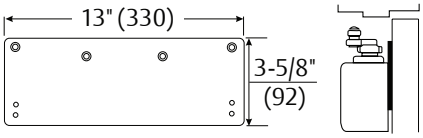

Narrow Top Rail - 8148 Drop Plate:

For use where a narrow top rail prevents the closer from being mounted directly to the door surface. This drop plate can be used to mount a closer on a top rail as narrow as 2-7/8" (73mm) in height.

Full Cover Installations

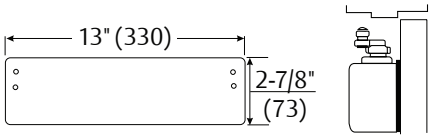

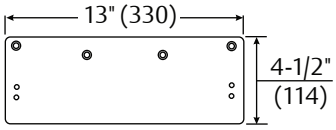

Exposed Back - 8445 Molded Full Cover Decorative Back Plate:

For use on doors with glass lights where a closer with molded full cover is installed and the closer back is exposed. This plate covers the back of the installation to give a pleasing appearance from the reverse side.

Exposed Back/Narrow Top Rail - 8158 Molded Full Cover Drop Plate:

For use on doors with glass lights where a closer with molded full cover is installed and the back of the closer is exposed. This covers the back of the installation and gives a pleasing appearance from the reverse side.

Metal Cover Installations

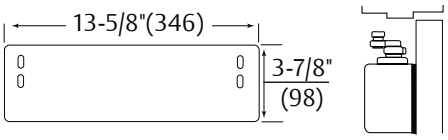

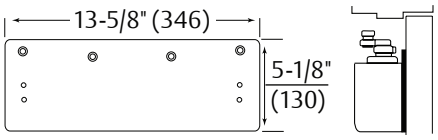

Exposed Back - 8545 Metal Full Cover Decorative Back Plate:

For use on doors with glass lights where a closer with full metal cover is installed and the back of the closer is exposed. This plate covers the back of the installation and gives a pleasing appearance from the reverse side.

Exposed Back/Narrow Top Rail - 8548 Metal Full Cover Drop Plate:

For use on doors with glass lights where a closer with metal full cover is installed on a narrow top rail, and the back of the cover is exposed. This drop plate can be used to mount a closer on a top rail as narrow as 2-7/8" (73mm) in height. This plate covers the back of the installation and gives a pleasing appearance from the reverse side.

Architectural Plastic or Metal Cover Installations

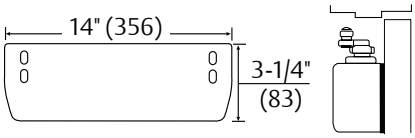

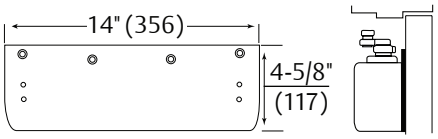

Exposed Back - 8545A Architectural Plastic or Architectural Metal Cover Decorative Back Plate:

For use on doors with glass lights where a closer with an architectural plastic or metal cover is installed and the closer back is exposed. This plate covers the back of the installation to give a pleasing appearance from the reverse side.

Exposed Back/Narrow Top Rail - 8548A Architectural Plastic or Architectural Metal Cover Drop Plate:

For use on doors with glass lights where a closer with an architectural plastic or metal cover is installed on a narrow top rail, and the back of the cover is exposed. This drop plate can be used to mount a closer on a top rail as narrow as 2-7/8" (73mm) in height. This plate covers the back of the installation to give a pleasing appearance from the reverse side.

PARALLEL ARM

Brackets for Non-Hold Open Arms

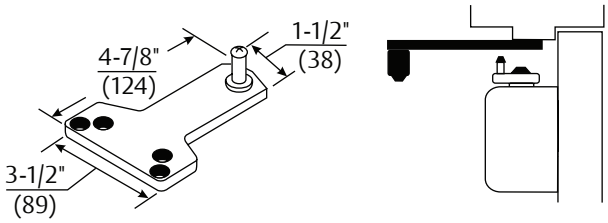

Standard Installation - 1618A Soffit Plate:

This soffit plate is supplied standard with parallel arm closers. It can be mounted where the frame soffit is as narrow as 1" (25 mm).

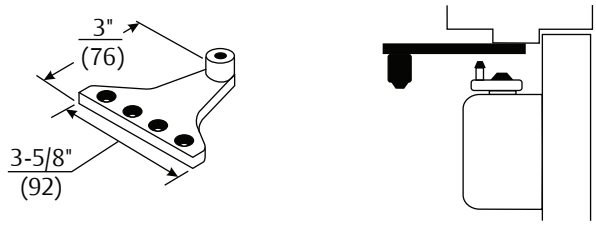

Narrow Frame/Removable Stop - 2018B Soffit Plate:

For use where a narrow frame or frame with removable stop does not permit use of the standard soffit plate. This soffit plate may be mounted on the frame soffit or the frame rabbet where the stop does not exceed 5/8" (16mm) in height. All of the screw holes are in a straight line, requiring as little as 1-1/4" (32mm) of frame reveal to mount bracket and maintain good closer arm geometry. Where the frame soffit is as wide as 2" (51mm), this soffit plate may be used to clear weather-stripping that is up to 1-3/8" (35mm) wide and 5/8" (16mm) in height.

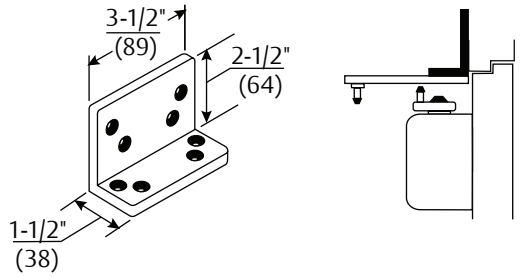

Flush Transom - 2022 Angle Bracket:

For use where rabbeted or flush transom conditions prevent installation of a soffit plate. Used in combination with the 1618 soffit plate, or may be used in combination with the 2018S soffit plate when it is necessary for the closer arm to clear a separate overhead door holder.

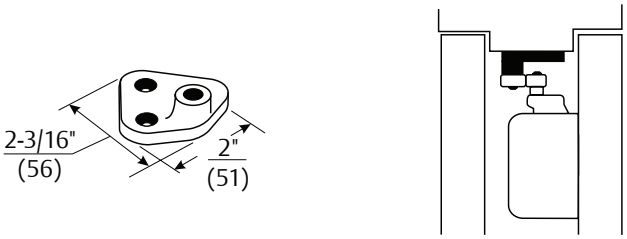

Mounting between Doors - 2018 Soffit Bracket:

For use where insufficient space between companion doors does not permit use of other soffit plates. This bracket permits mounting of the closer between doors with as little as 3" (76mm) of header space. Permits closer arm to clear up to 5/8" (16mm) high stop.

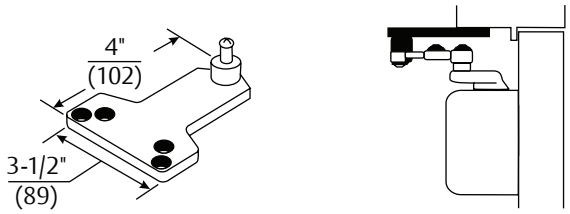

Blade/Applied Stop - 2018D Soffit Plate:

For use where a blade or applied stop does not permit installation of the standard soffit plate. Mounts to either the frame soffit or rabbet. Since this soffit plate projects 7/8" (22mm) less than a standard soffit plate, it requires a minimum frame reveal of 1-1/2" (38mm). Permits closer to clear up to a 5/8" (16mm) stop.

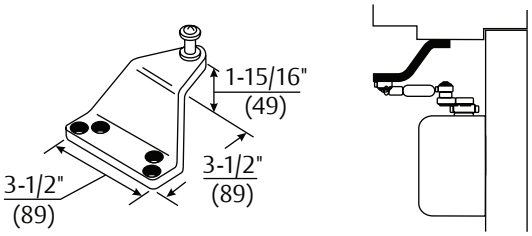

Extra-Clearance - 2018S Offset Soffit Plate:

For use where the need for additional clearance prevents use of the standard soffit plate. This plate mounts to the frame soffit to provide up to 2" (51mm) of clearance when a separate overhead door holder is used. Standard mounting requires a 2-5/8" (67mm) wide frame soffit. It may also be used where unusually high frame stops or weatherstripping prevent the use of other soffit plates.

PARALLEL ARM

Brackets for Non-Hold Open & Hold Open Arms

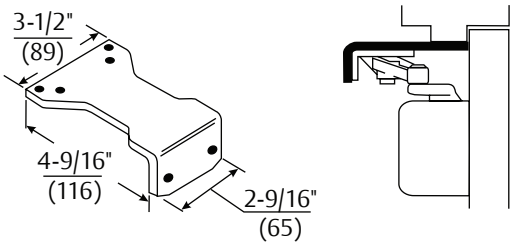

Parallel Hold Open - 1628H Adapter Plate:

Supplied standard with all parallel arm hold open closers. It can also be used to convert regular arm or top jamb hold open arms to parallel arm installation. It can be mounted where the frame soffit is as narrow as 1" (25mm).

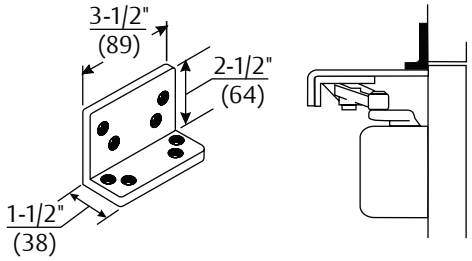

Flush Transom - 2022 Angle Bracket:

For use where rabbeted or flush transom conditions prevent installation of a soffit plate. Used in combination with the 1628H adapter plate, this bracket fastens to the overhead transom to provide a mounting surface for the soffit plate assembly.

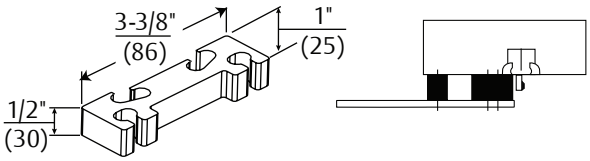

Clearance/Support Blade Stop - 6891 Spacer Block:

For use where the door frame has a blade stop and the soffit plate must be mounted on the frame rabbet. This accessory is used in combination with the standard spacer block to provide clearance of the blade stop. Also used with non-hold open arms.

PARALLEL RIGID, CLOSERPLUS & CLOSERPLUS SPRING ARMS

Closer Mounting Plate
Slim Line Installations

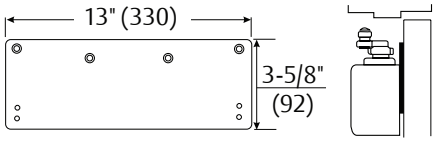

Narrow Top Rail - 8148 Drop Plate:

For use where a narrow top rail prevents the closer from being mounted directly to the door surface. This drop plate can be used to mount a closer on a top rail as narrow as 2-9/16" (65mm) in height.

Full Cover Installations

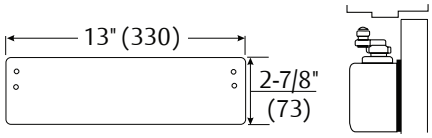

Exposed Back - 8445 Molded Full Cover Decorative Back Plate:

For use on doors with glass lights where a closer with molded full cover is installed and the closer back is exposed. This plate covers the back of the installation to give a pleasing appearance from the reverse side.

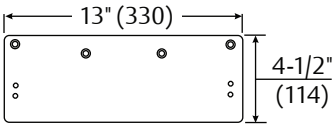

Exposed Back/Narrow Top Rail - 8158 Molded Full Cover Drop Plate:

For use on doors with glass lights where a closer with molded full cover is installed and the back of the closer is exposed. This covers the back of the installation and gives a pleasing appearance from the reverse side.

Metal Cover Installations

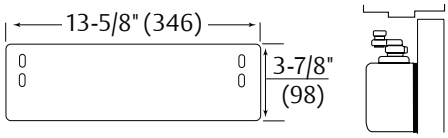

Exposed Back - 8545 Metal Full Cover Decorative Back Plate:

For use on doors with glass lights where a closer with full metal cover is installed and the back of the closer is exposed. This plate covers the back of the installation and gives a pleasing appearance from the reverse side.

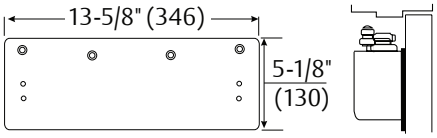

Exposed Back/Narrow Top Rail - 8548 Metal Full Cover Drop Plate:

For use on doors with glass lights where a closer with metal full cover is installed on a narrow top rail, and the back of the cover is exposed. This drop plate can be used to mount a closer on a top rail as narrow as 2-9/16" (65mm) in height. This plate covers the back of the installation and gives a pleasing appearance from the reverse side.

Architectural Plastic or Metal Cover Installations

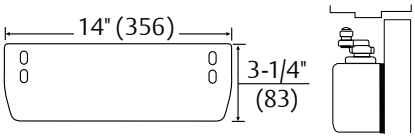

Exposed Back - 8545A Architectural Plastic or Architectural Metal Cover Decorative Back Plate:

For use on doors with glass lights where a closer with an architectural plastic or metal cover is installed and the closer back is exposed. This plate covers the back of the installation to give a pleasing appearance from the reverse side.

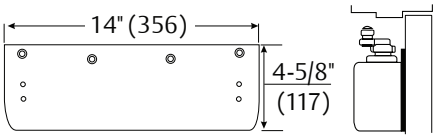

Exposed Back/Narrow Top Rail - 8548A Architectural Plastic or Architectural Plastic or Architectural Metal Cover Drop Plate:

For use on doors with glass lights where a closer with an architectural plastic or metal cover is installed on a narrow top rail, and the back of the cover is exposed. This drop plate can be used to mount a closer on a top rail as narrow as 2-9/16" (65mm) in height. This plate covers the back of the installation to give a pleasing appearance from the reverse side.

PARALLEL RIGID, CLOSERPLUS & CLOSERPLUS SPRING ARMS

Brackets for Non-Hold Open Arms & Hold Open Arms

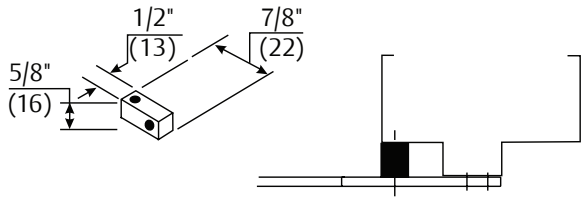

Standard - 2019S Spacer Block:

For use where a narrow frame soffit does not provide adequate support for the soffit plate. Supplied as standard with all parallel rigid arm closers.

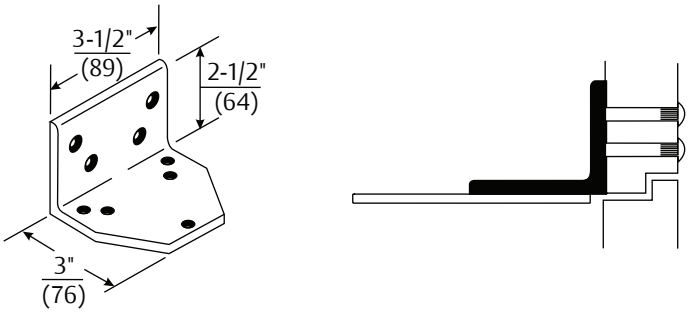

Flush Rabbeted Transom - 2019L Angle Bracket:

For use where flush transom conditions prevent mounting of the standard soffit plate. This bracket is used in combination with the standard soffit plate.

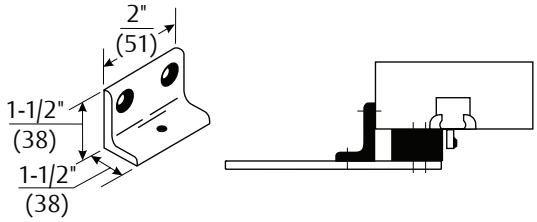

Narrow Frame - 6890 Support Bracket:

For use where the frame is narrow and the soffit plate cannot be mounted directly to the frame soffit or rabbet. Used in combination with the 6891 Spacer B lock on blade stop frames to provide extra support and needed clearance of the blade stop. Used on frames where the frame stop does not exceed 5/8" (16mm) in height.

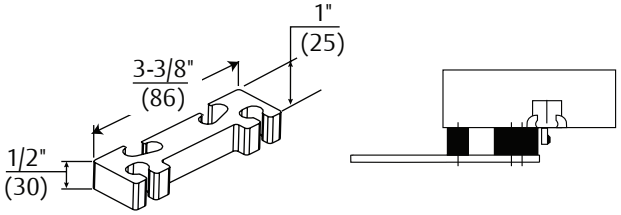

Clearance/Support Blade Stop - 6891 Spacer Block:

For use where the door frame has a blade stop and the soffit plate must be mounted on the frame rabbet. This accessory is used in combination with the standard spacer block to provide clearance of the blade stop.

UNITROL® ARM

Closer Mounting Plate Parallel Arm

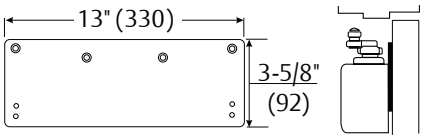

Narrow Top Rail - 8148 Drop Plate:

For use where a narrow top rail prevents the closer from being mounted directly to the door surface. This drop plate can be used to mount a closer on a top rail as narrow as 2-7/16" (62mm) in height.

Full Cover Installations

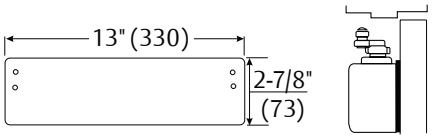

Exposed Back - 8445 Molded Full Cover Decorative Back Plate:

For use on doors with glass lights where a closer with molded full cover is installed and the closer back is exposed. This plate covers the back of the installation to give a pleasing appearance from the reverse side.

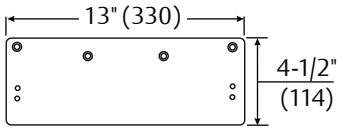

Exposed Back/Narrow Top Rail - 8158 Molded Full Cover Drop Plate:

For use on doors with glass lights where a closer with molded full cover is installed and the back of the closer is exposed. This covers the back of the installation and gives a pleasing appearance from the reverse side.

Metal Cover Installations

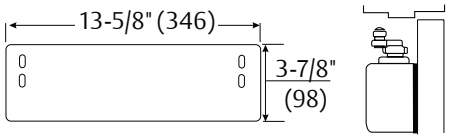

Exposed Back - 8545 Metal Full Cover Decorative Back Plate:

For use on doors with glass lights where a closer with full metal cover is installed and the back of the closer is exposed. This plate covers the back of the installation and gives a pleasing appearance from the reverse side.

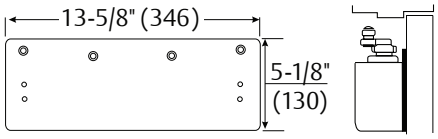

Exposed Back/Narrow Top Rail - 8548 Metal Full Cover Drop Plate:

For use on doors with glass lights where a closer with metal full cover is installed on a narrow top rail, and the back of the cover is exposed. This drop plate can be used to mount a closer on a top rail as narrow as 2-9/16" (65mm) in height. This plate covers the back of the installation and gives a pleasing appearance from the reverse side.

Architectural Plastic or Metal Cover Installations

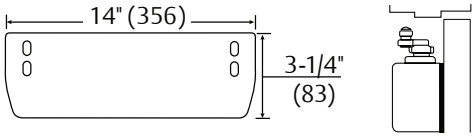

Exposed Back - 8545A Architectural Plastic or Architectural Metal Cover Decorative Back Plate:

For use on doors with glass lights where a closer with an architectural plastic or metal cover is installed and the closer back is exposed. This plate covers the back of the installation to give a pleasing appearance from the reverse side.

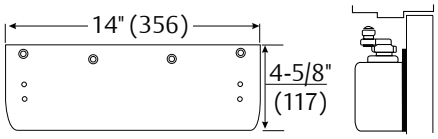

Exposed Back/Narrow Top Rail - 8548A Architectural Plastic or Architectural Plastic or Architectural Metal Cover Drop Plate:

For use on doors with glass lights where a closer with an architectural plastic or metal cover is installed on a narrow top rail, and the back of the cover is exposed. This drop plate can be used to mount a closer on a top rail as narrow as 2-7/16" (62mm) in height. This plate covers the back of the installation to give a pleasing appearance from the reverse side.

UNITROL® ARM

Soffit Plate Reinforcing Brackets (for Parallel Arm)

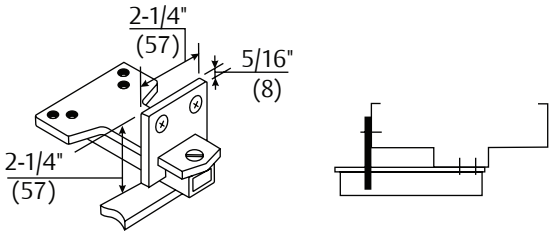

Additional Support - 6190 Reinforcing Bracket:

Standard for use with all parallel arm Unitrol door controls. Provides additional support to the soffit plate on installations with door frame reveals from 1-7/8" to 4-5/8" (48 to 117mm).

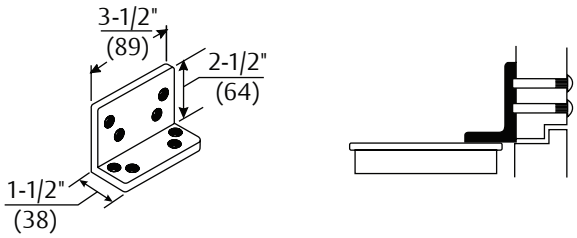

Flush Rabbeted Transom - 2022 Angle Bracket:

Optional for use with all parallel arm Unitrol door controls. For use where rabbeted or flush transom conditions prevent installation of the soffit plate assembly. This bracket fastens to the overhead transom to provide a mounting surface for the soffit plate assembly.

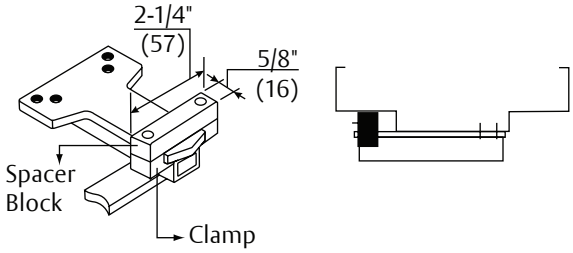

Wide Frame - 6191 Reinforcing Kit:

Optional for use with all parallel arm Unitrol door controls. Used to support the soffit plate on installations with wide frames. Clamps may be used with or without the spacer block, depending on frame conditions.

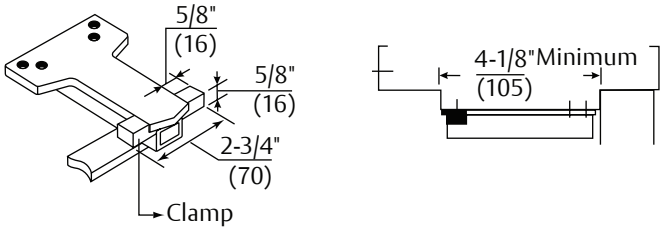

UNITROL® ARM

Closer Mounting Plate Top Jamb

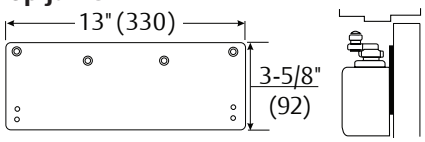

Narrow Top Rail - 8148 Drop Plate:

For use where a narrow top rail prevents the closer from being mounted directly to the door surface. This drop plate can be used to mount a closer on a top rail as narrow as 2-7/16" (62mm) in height.

Full Cover Installations

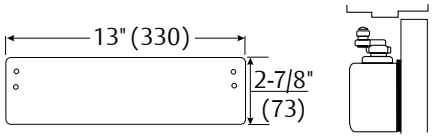

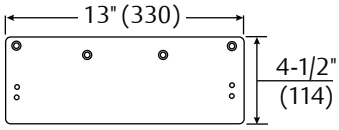

Exposed Back - 8445 Molded Full Cover Decorative Back Plate:

For use on doors with glass lights where a closer with molded full cover is installed and the closer back is exposed. This plate covers the back of the installation to give a pleasing appearance from the reverse side.

Exposed Back/Narrow Top Rail - 8158 Molded Full Cover Drop Plate:

For use on doors with glass lights where a closer with molded full cover is installed and the back of the closer is exposed. This covers the back of the installation and gives a pleasing appearance from the reverse side.

Metal Cover Installations

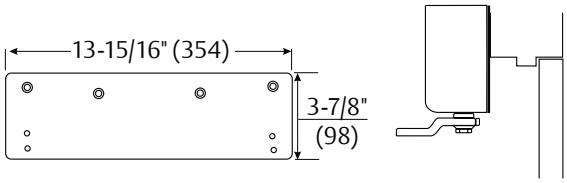

Low Ceiling Clearance - Overhead Door Holder - 8547 Metal Full Cover Drop Plate:

For use where a low ceiling clearance prevents normal top jamb mounting. This plate is used when the clearance is between 1-5/8" and 3-3/4" (41 and 95mm). Or for use where a surface or concealed overhead door holder prevents normal top jamb mounting of a closer with a metal full cover. This plate drops the closer and allows arm mounting screws to clear the bottom of the door holder. This places the centerline of the arm mounting screws at 3-7/8" (98mm) from the top of the door.

Architectural Plastic or Metal Cover Installations

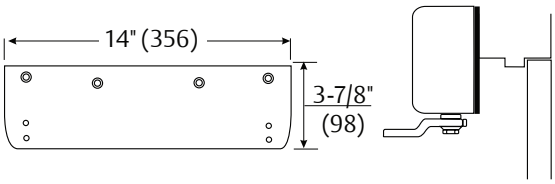

Low Ceiling Clearance - Overhead Door Holder - 8547A Architectural Plastic or Architectural Metal Cover Drop Plate:

For use where low ceiling clearance prevents normal top jamb mounting. This plate is used when the clearance is between 1-5/8" and 3-3/4" (41 and 95mm). Or for use where a surface or concealed overhead door holder prevents normal top jamb mounting of a closer with an architectural plastic or metal full cover. This plate drops the closer and allows arm mounting screws to clear the bottom of the door holder. This places the centerline of the arm mounting screws at 3-7/8" (98mm) from the top of the door.

DOOR CLOSER BODY ASSEMBLIES

Model Number	Description
8101LAP	Multi-sized closer bodies (8101, 8301 or 8501)

LAP = Less All Parts

Closer Series	Plastic	Metal	Arch. Plastic	Arch. Metal
8301	8200P	N/A	N/A	N/A
8501	8400P	8400M	8400A	8400MA

Cover Model	Cover Drawing
Slim Line* 8200P or 8200PG 1-3/4" high x 2-1/8" deep x 13" long (44 x 54 x 330)	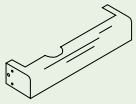
Full Plastic 8400P or 8400PG 2-7/8" high x 2-1/8" deep x 13" long (73 x 54 x 330)	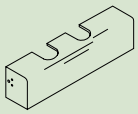
Full Metal 8400M 3-7/8" high x 2-3/16" deep x 13-5/8" long (98 x 54 x 346)	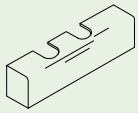
Architectural Plastic 8400A or 8400AG 3-3/32" high x 2-1/4" deep x 13-7/8" long (79 x 56 x 352)	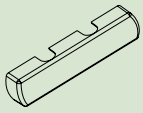
Architectural Metal 8400MA 3" high x 2-3/16" deep x 13-15/16" long (76 x 56 x 354)	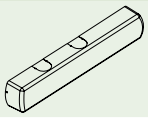

*The 1639 pinion cap is NOT included with the 8200P or 8200PG covers. The cap is included with the complete closer package (8300, 8301).

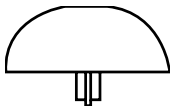

STEEL DOOR APPLICATION

Sleeve-nut : "SN" (4 per pack) or
Sleeve-nut & Screw: "SNB" (4 per pack)

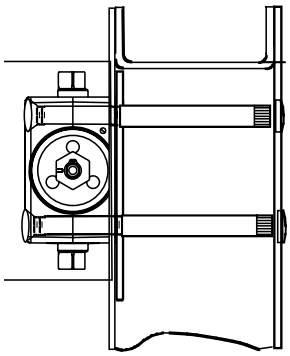

Door	SN's	SNB's
1-3/4"	SN-134	SNB134-38
2"	NA	SNB200-38
2-1/4"	SN-214	SNB214-38
S.S. SNB'S 1-3/4"	SN-134SS	SNB134SS-38

ALUMINUM AND WOOD DOOR APPLICATION (ALUMINUM DOOR SHOWN)

Thru Bolt & Grommet Nut : "TBGN" (4 per pack)

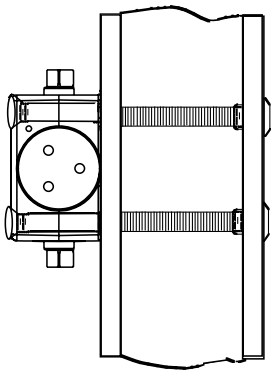

Door	SN's
1-3/8"	TBGN138-38
1-3/4"	TBGN134-38
2-1/4"	TBGN214-38

Arm Type	Torx® Screw Packs
Regular, Parallel & Top Jamb	TX38
Parallel Rigid, CloserPlus® & CloserPlus Spring™	PRTX38
Regular Rigid Heavy-Duty	RTX38
Unitrol®	UNITX38
Slide Track	STTX38

NON-HOLD OPEN ARM ASSEMBLIES

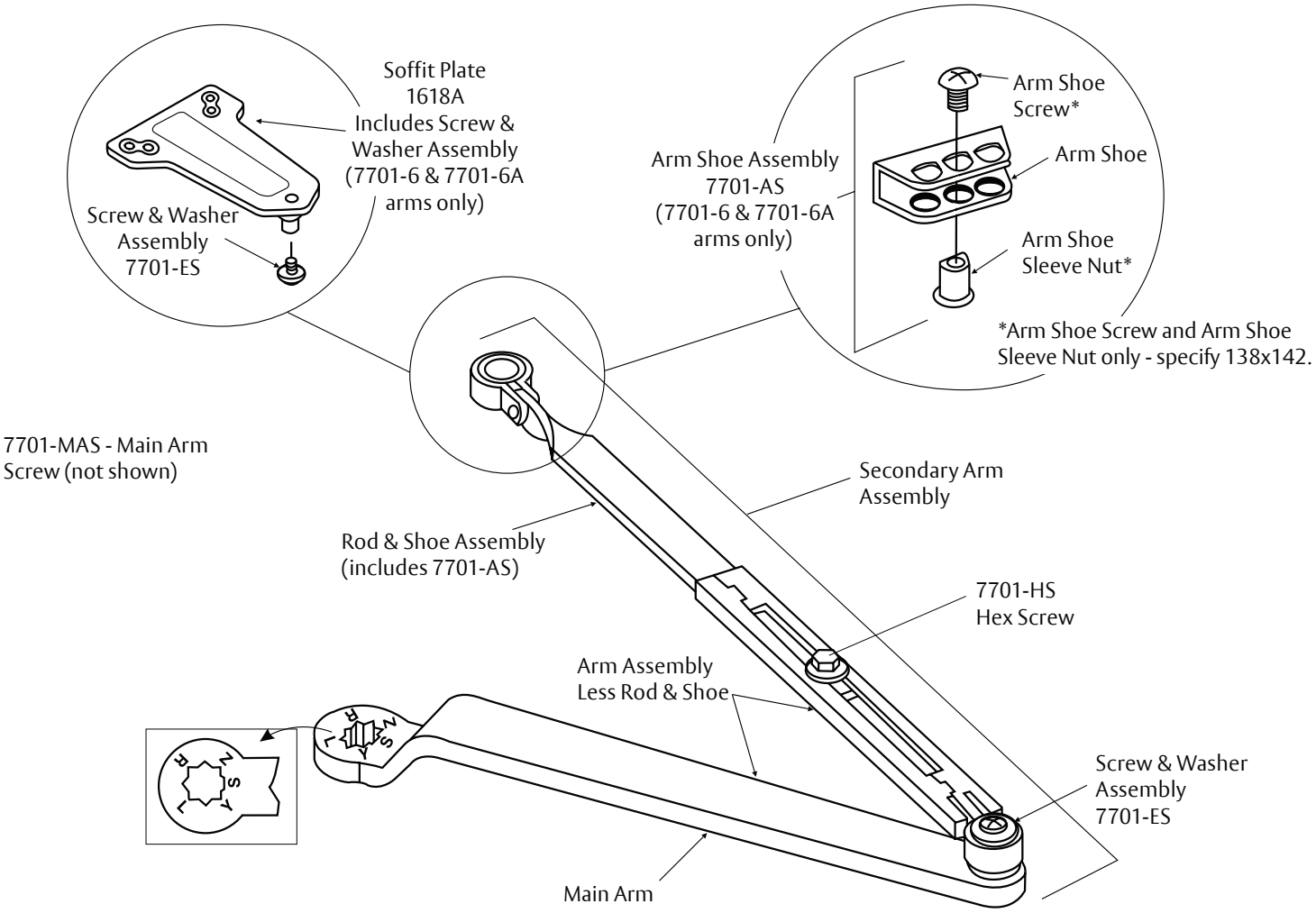

Note: Mounting hardware included with all parts orders.

Closer Series	Complete Arm Assembly	Main Arm Assembly[1] (length)(mm) (includes 7701-ES)	Secondary Arm Assembly (includes 7701-ES)	Arm Assembly Less Rod and Shoe	Rod & Shoe Assembly[2] (length)(mm)
8000	7701-1	7701-1M (11)(279)	7701-111	7701-1W	7701-11 (8-7/8)(225)
J8000	7701-1A		7701-121		7701-11A (12-9/16)(319)
P8000	7701-6		7701-116		7701-16 (8-7/8)(225)
P8000[3]	7701-6A		7701-116A		7701-16A (12-9/16)(319)
7500	7701-26 (tri pack includes 7701-1 plus 1618A plate)	1. C to C length shown in parentheses. 2. C of connecting link to end of rod shown in parentheses. 3. For 180° door swing when using a special template for doors hung on 6" to 8" (162 to 203mm) wide throw hinges.			

HOLD OPEN ARM ASSEMBLIES

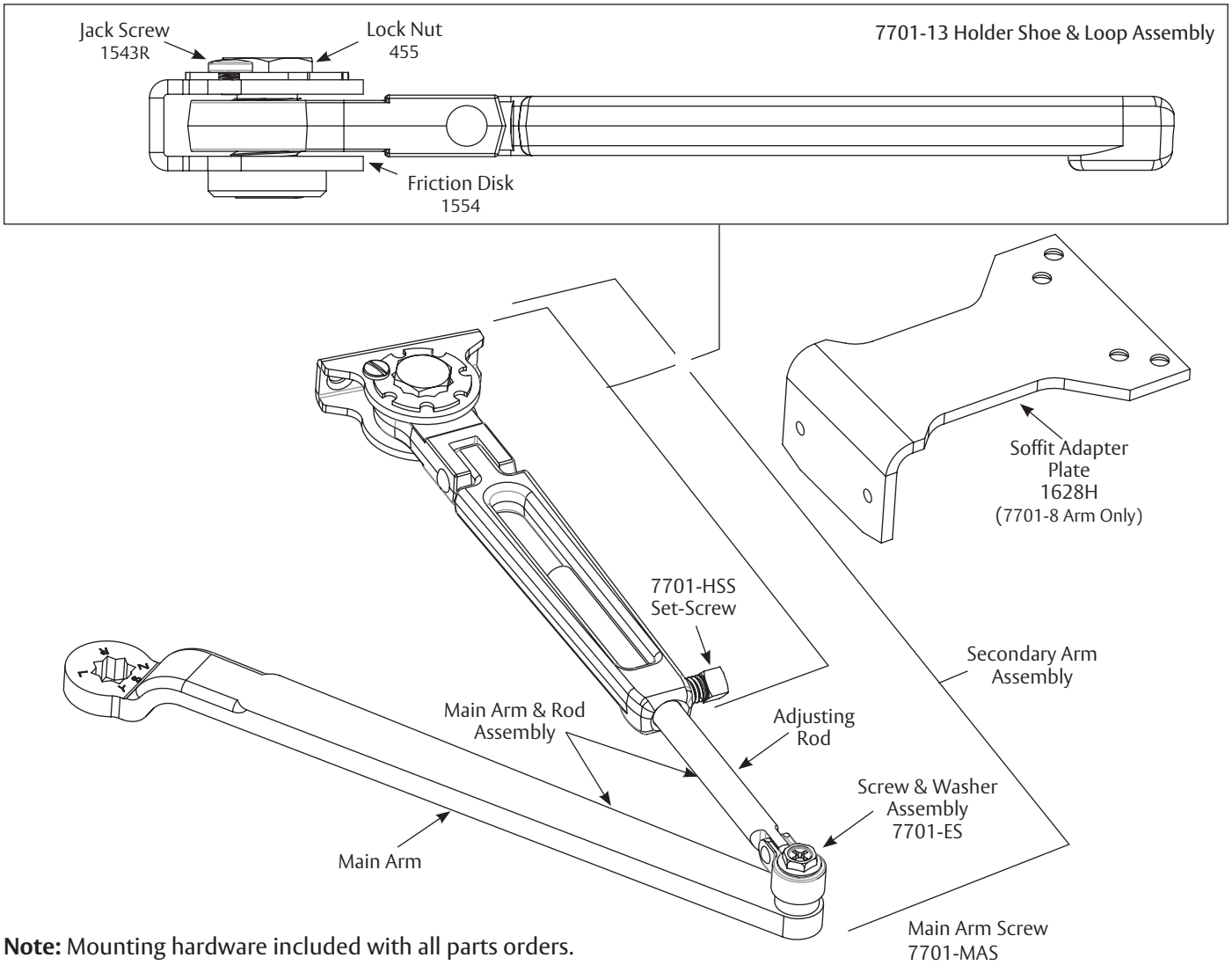

Note: Mounting hardware included with all parts orders.

Closer Series	Complete Arm	Main Arm Assembly[1] (mm) (includes 7701-ES)	Secondary Arm (includes 7701-ES)	Main Arm & Rod Assembly	Holder Shoe & Loop Assembly	Adjusting Rod[2] (Length)(mm)
8000H	7701-3/7701-8[3]	7701-1M (11)(279)	7701-113/7700-118 (Reg.) / (Par.)	7701-3W	7701-13/7701-18[4]	7701-31 (7-3/8)(187)
J8000H	7701-3A		7701-123	7701-3WA	7701-13	7701-31A (10-13/16)(275)

1. C to C length shown in parentheses.
2. C of connecting link to end of rod shown in parentheses.
3. Same as 7701-3 but includes #1628H soffit adapter plate.
4. Same as 7701-13 but includes #1628H soffit adapter plate.

PARALLEL RIGID ARM ASSEMBLIES

Non-Hold Open Arm Shown

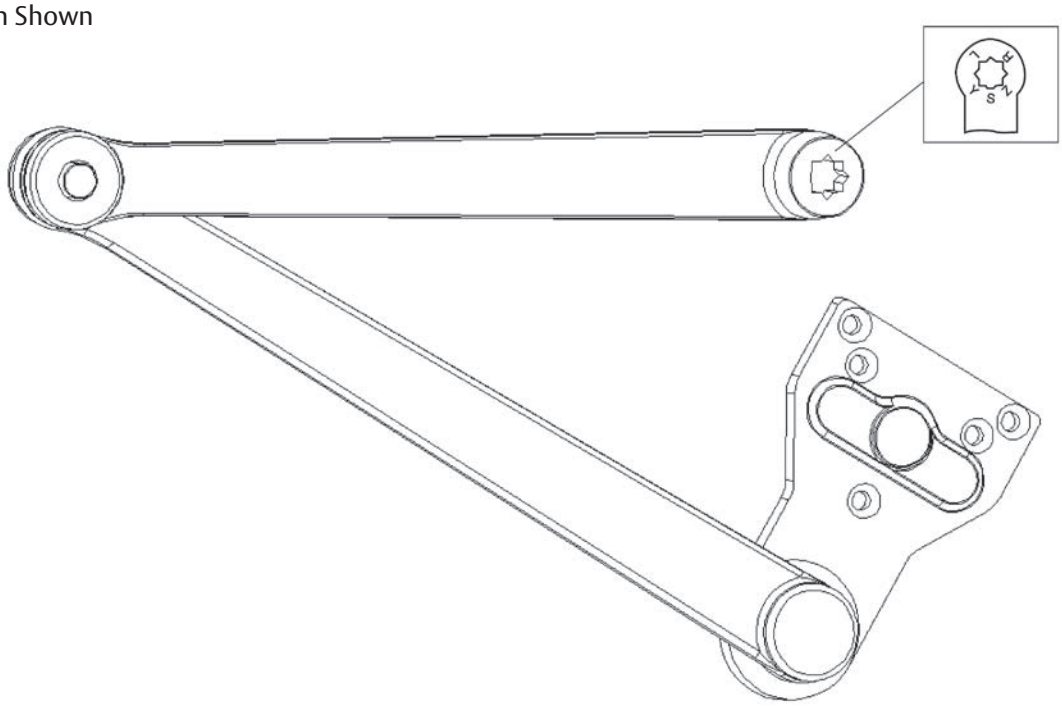

Hold Open Arms Only

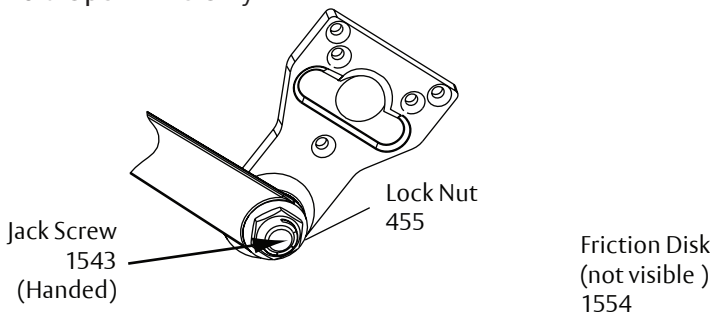

Note: Mounting hardware included with all parts orders.

Arm Function	Complete Arm Assembly
Non-Hold Open	PR7701-5
Hold Open	PR7701-8R (Right Hand)
	PR7701-8L (Left Hand)

CLOSERPLUS® ARM ASSEMBLIES

CLP
Non-Hold Open

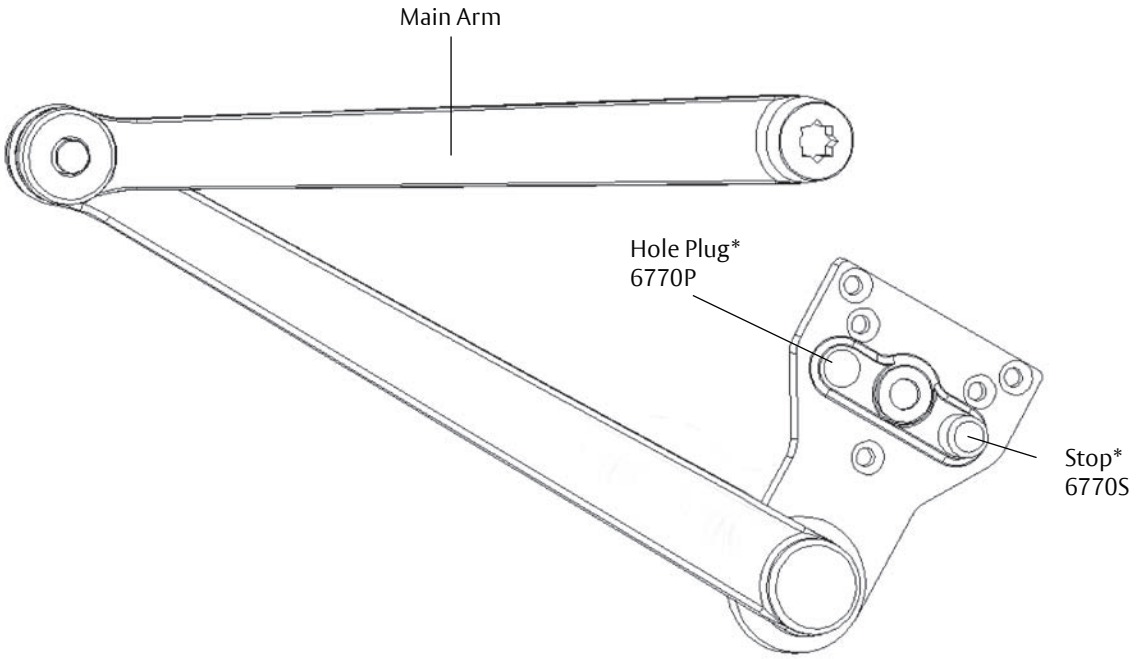

CLP-T
Thumbturn Hold Open

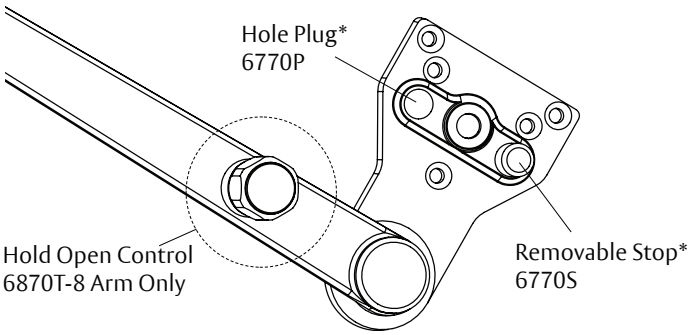

CLP-R
Ramp Hold Open

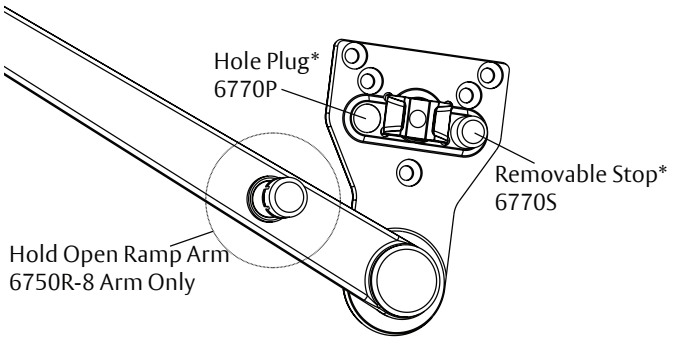

Note: Mounting hardware included with all parts orders.

Arm Function	Complete Arm Assembly
Non-Hold Open	6770-5
Thumbturn Hold Open	6870T-8
Ramp Hold Open	6750R-8

* These parts and screw pack are included with complete arm assemblies.

CLOSERPLUS SPRING™ ARM ASSEMBLIES

Non-Hold Open Arm Shown

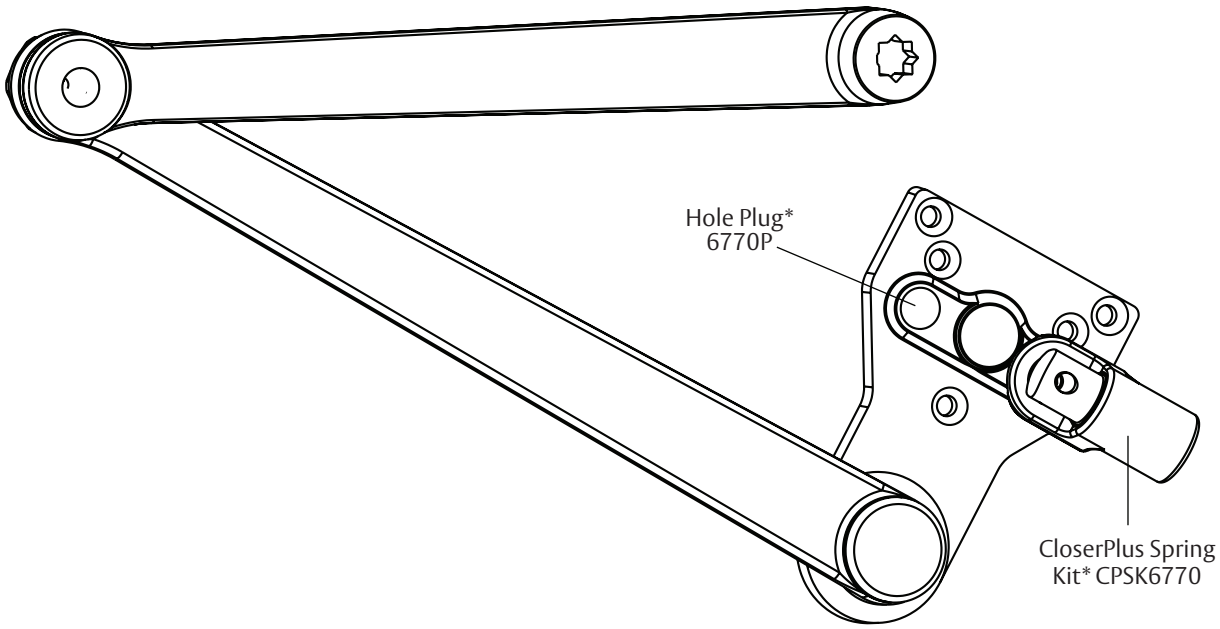

Note: Mounting hardware included with all parts orders.

Arm Function	Complete Arm Assembly
Non-Hold Open	CPS6770-5
Thumbturn Hold Open	CPS6870T-8

* These parts and screw pack are included with complete arm assemblies.

REGULAR RIGID HEAVY-DUTY ARMS

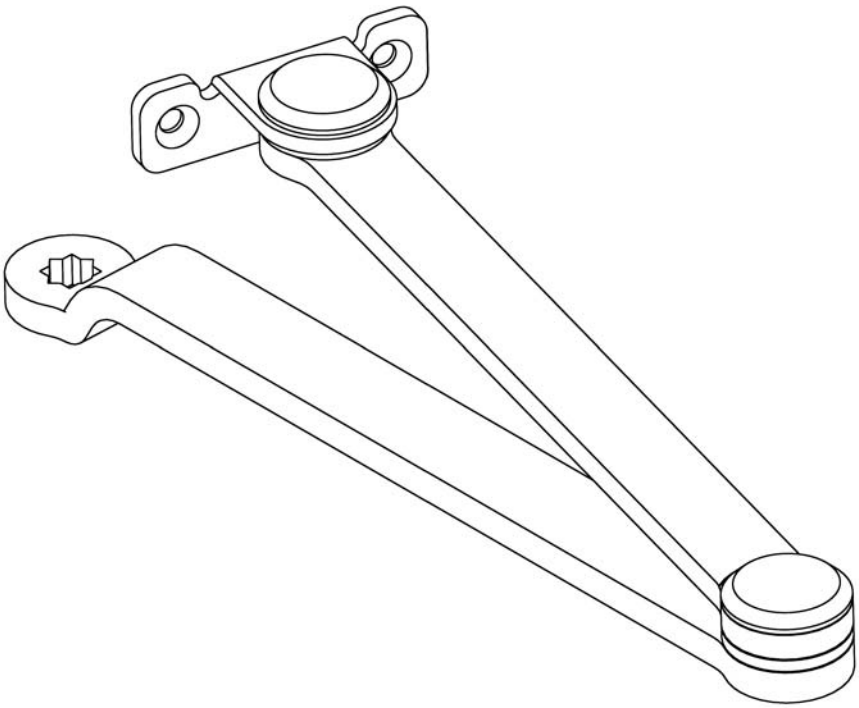

Note: Mounting hardware included with all parts orders.

Arm Function	Complete Arm Assembly
Non-Hold Open	R7701-1

PARALLEL RIGID OFFSET ARM ASSEMBLIES

Non-Hold Open

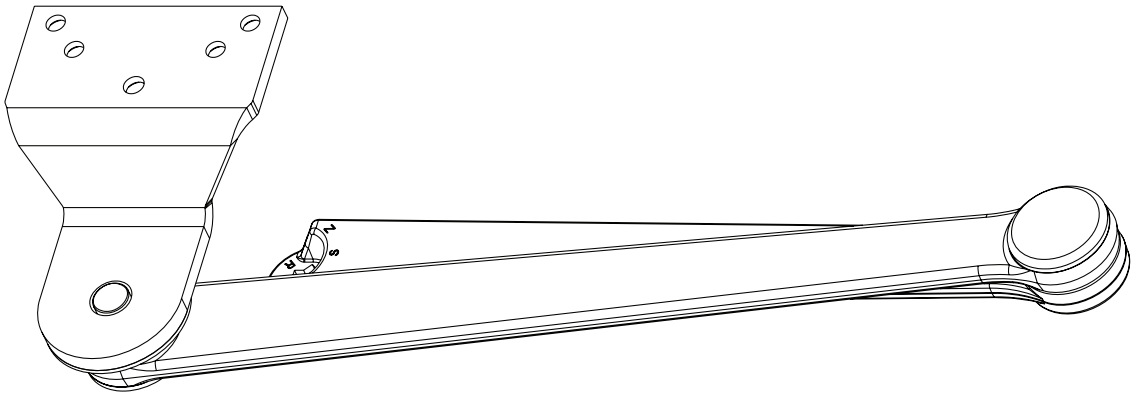

Side View

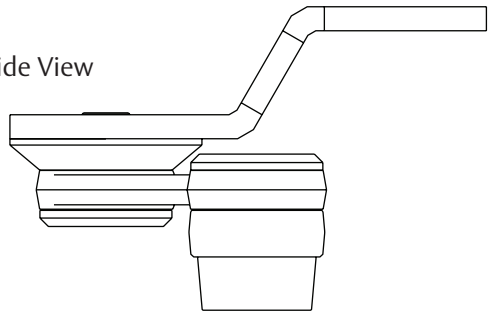

Note: Mounting hardware included with all parts orders.

Arm Function	Complete Arm Assembly
Non-Hold Open	PRO7701-5
Hold Open, Right Hand	PRO7701-8R
Hold Open, Left Hand	PRO7701-8L

UNITROL® ARM ASSEMBLIES

Parallel Arm

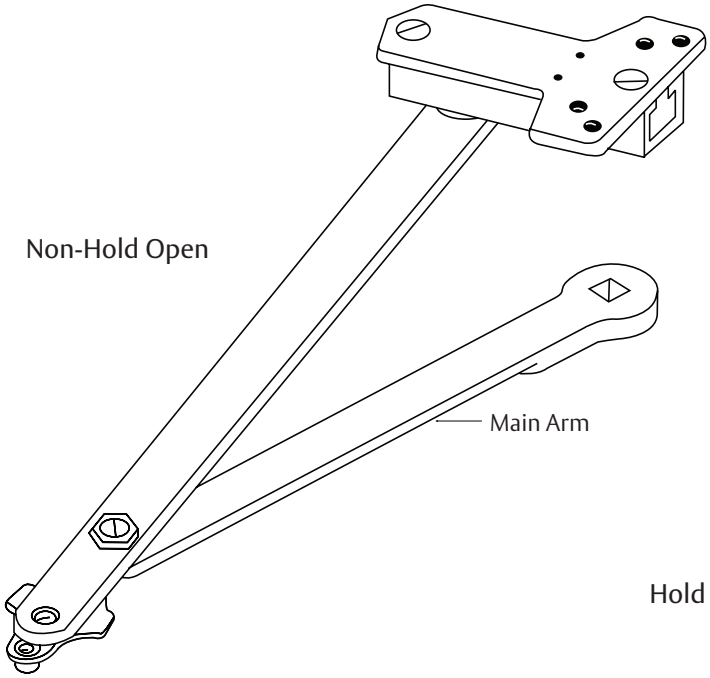

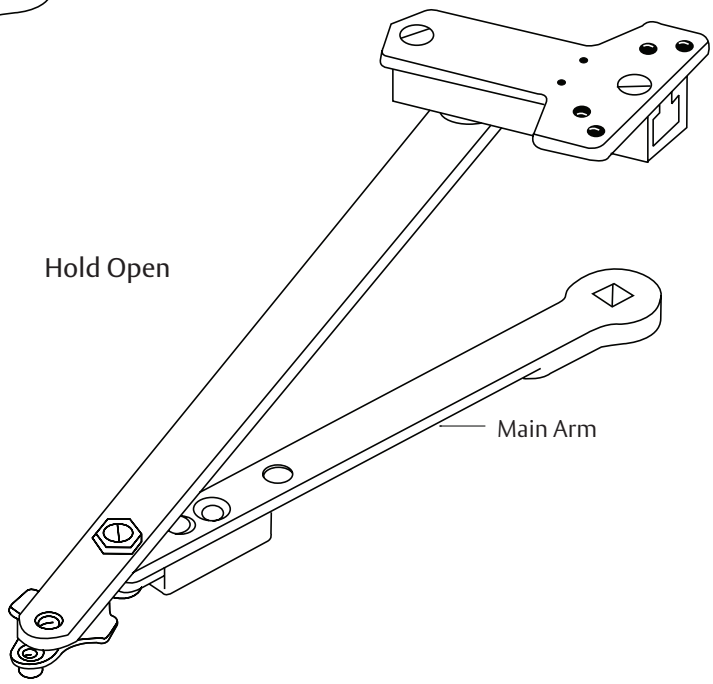

Note: Mounting hardware included with all parts orders.

Door Width (cm)	Main Arm Length* (mm)	Complete Arm Assembly	
		Non-Hold Open	Hold Open
28" - 32" (71- 81)	9-1/2" (241)	6100-11	6100-1
33"- 41" (84 - 104)	11" (279)	6100-13	6100-3
42" - 48" (107 - 122)	12-1/2" (318)	6100-14	6100-4

* Center to center length.
Only available in painted finishes.

UNITROL® ARM ASSEMBLIES

Top Jamb

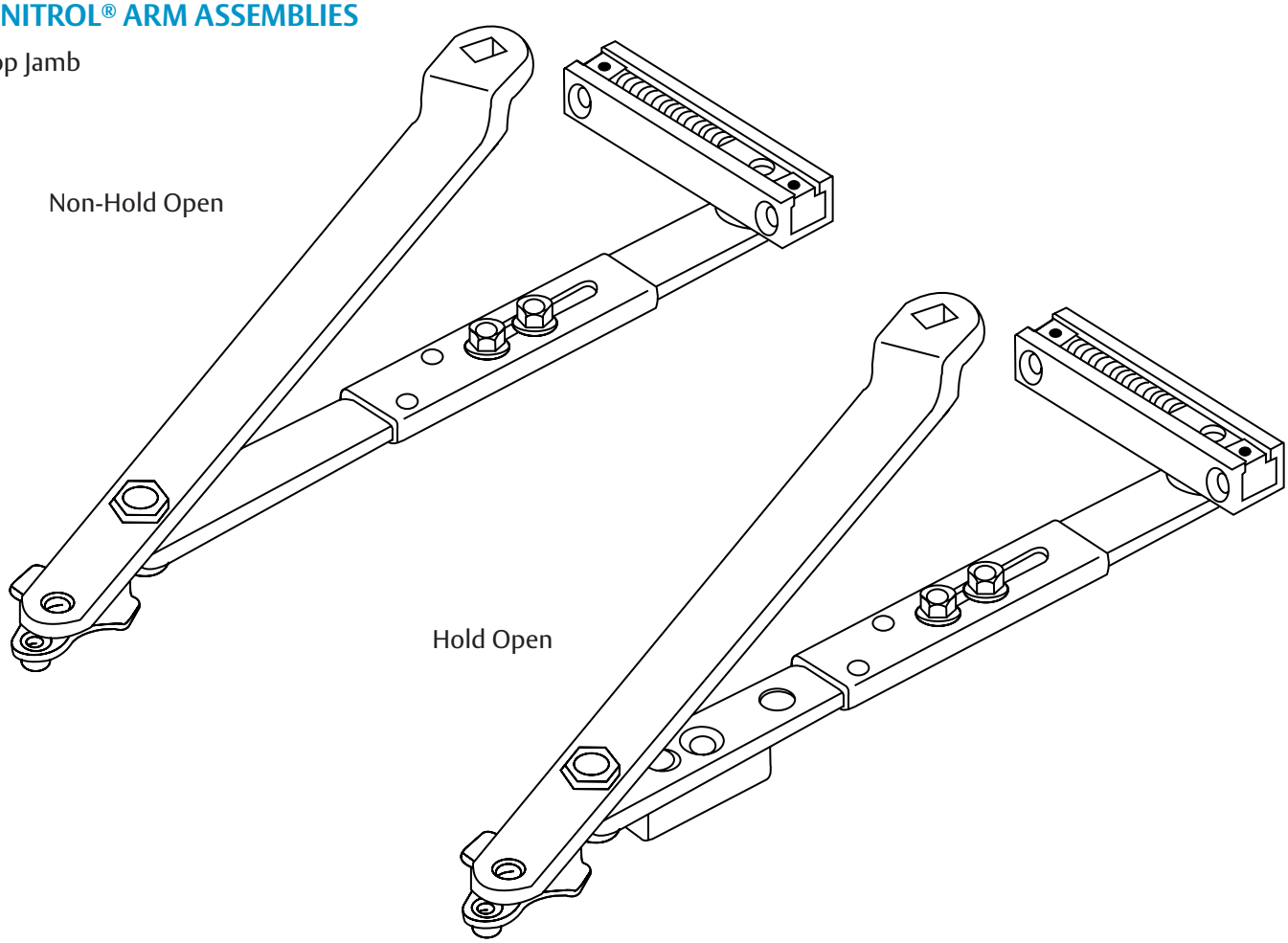

Note: Mounting hardware included with all parts orders.

Complete Arm Assembly		For Frame Reveals (mm)
Non-Hold Open	Hold Open	
J6100-4	J6100-7	2-1/8" - 3-1/4" (54 - 83)
J6200-4	J6200-7	1/2" - 2" (13 - 51)
J6400-4	J6400-7	3-3/8" - 4-1/4" (86 - 108)
J6500-41	J6500-71	4-3/8" - 5-3/8" (111 - 137)
J6500-42	J6500-72	5-1/2" - 6-3/8" (140 - 162)
J6500-43	J6500-73	6-1/2" - 7-3/8" (165 - 187)
J6600-4	J6600-7	0" - 3/8" (0 - 10)

Only available in painted finishes.

LOW PROFILE ARM ASSEMBLIES

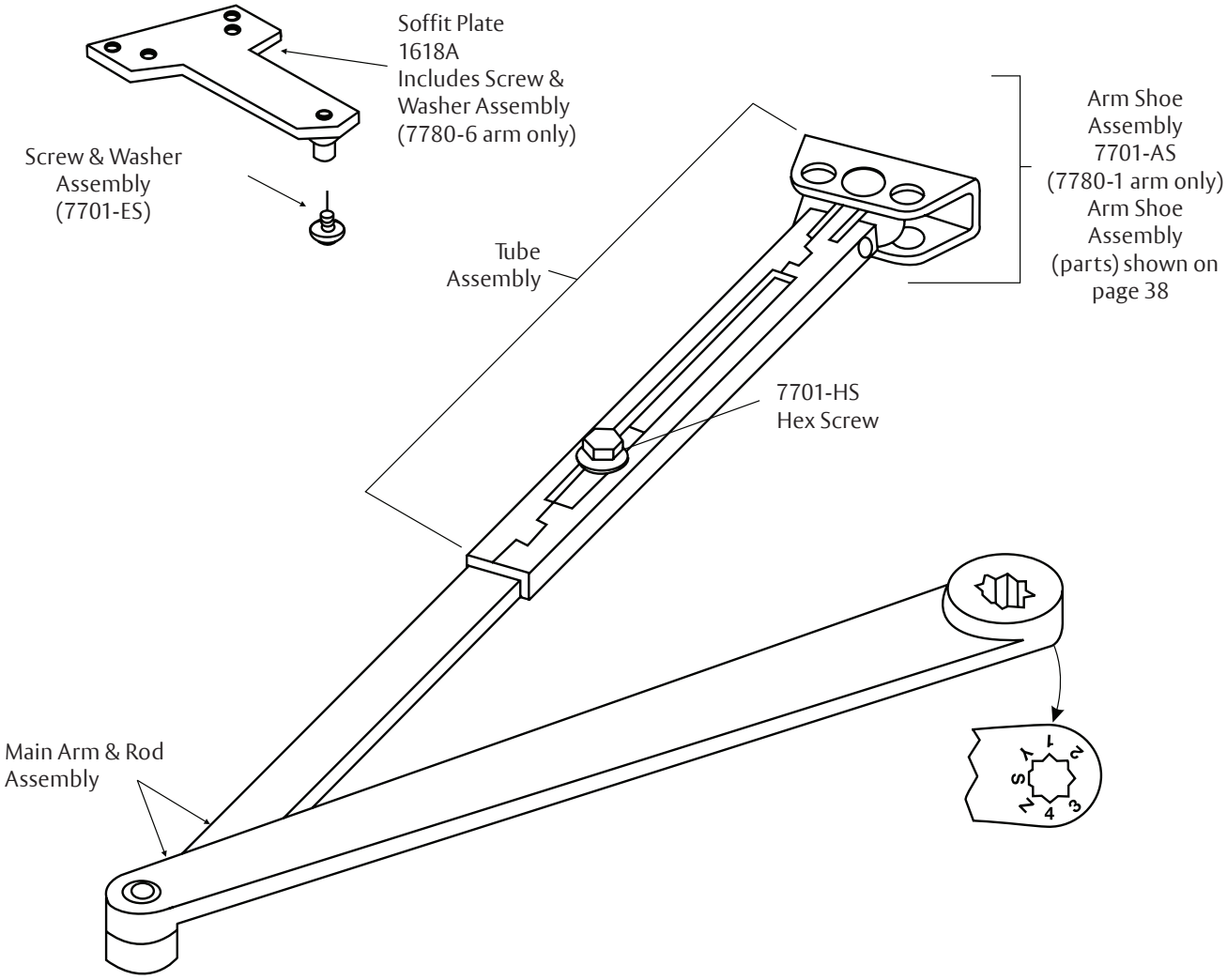

Note: Mounting hardware included with all parts orders.

Arm Application	Complete Arm Assembly	Main Arm & Adjusting Rod Assembly	Tube & Shoe/Soffit Assembly
Regular Arm	7780-1	7780-1MR	7780-1TS (With 7701-AS)
Parallel Arm	7780-6		7780-6TS (With 1618A)
Tri-pack	7780-26		

TRACK & ARM ASSEMBLIES

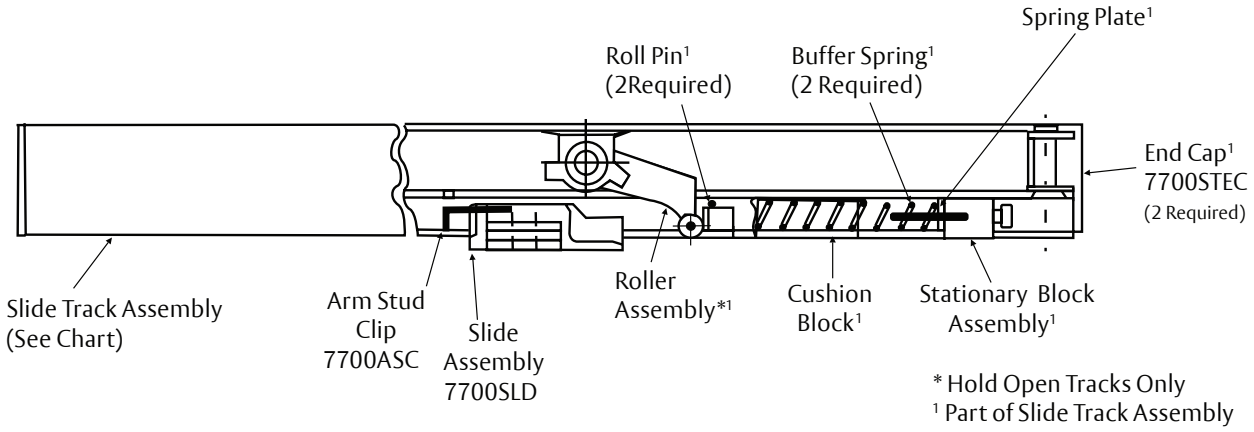

Note: Mounting hardware included with all parts orders.

Slide Track Assembly	Part Number	
Description	Non-Hold Open	Hold Open
Pull-side	7701ST-1T	7701ST-3T
Pull Side (180°)	7701ST-1T180	N/A
Push Side	7701ST-5T	7701ST-8T

TRACK & ARMS ASSEMBLIES

Standard Arm Assembly

7701ST-1A*[1]

Arm Tube Assembly
7701ST-1AT[1]

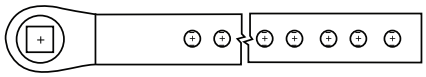

Adjusting Rod Assembly
7701ST-1AR[1]

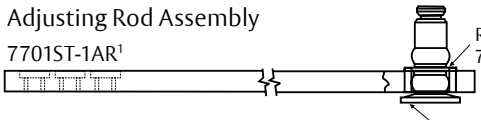

Double Egress Arm Assembly

7701PT-DE-1R (Right Hand)*[1]
7701PT-DE-1L (Left Hand)*[1]

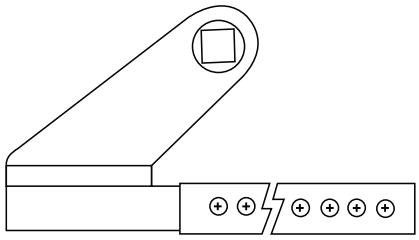

Arm Tube Assembly
7701ST-1ATR[1] (right hand)
7701ST-1ATL[1] (left hand)

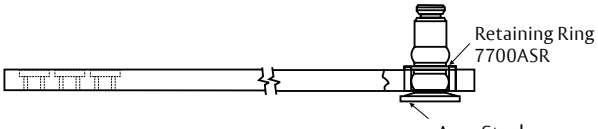

Adjusting Rod Assembly
7701ST-1AR[1]

TRACK ASSEMBLIES - SHALLOW DEPTH

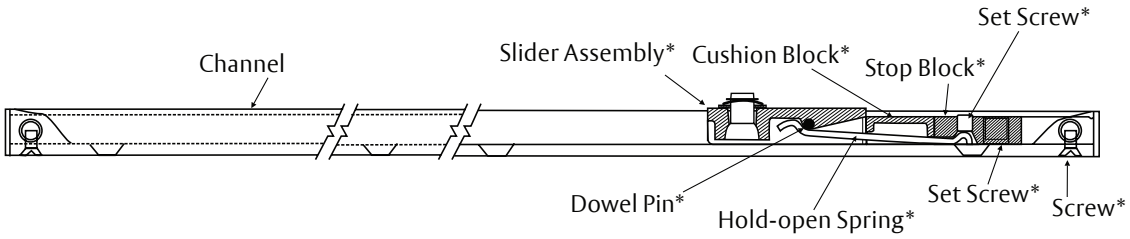

*Part of an Assembly Pack
NHo = 7740SLD
Ho = 7740HSLD

Note: Mounting hardware included with all parts orders.

Track Assemblies	Part Number	
Description	Non-Hold Open	Hold Open
Pull-side mounted	7740ST-1T	7740ST-3T
Push-side mounted	7740ST-5T	7740ST-8T

Arm Assembly

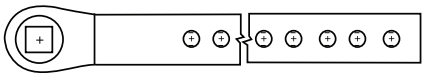

Arm Tube Assembly
7701ST-1AT[2]

7740ST-1A[1, 2]

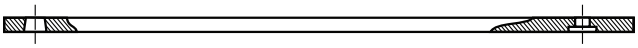

Adjusting Rod Assembly
7740ST-1AR[2]

1 Includes arm length adjusting screw.
2 Includes arm tube & adjusting rod assembly.

FASTENERS

Standard Fasteners	With Arms Specified Below					
	Regular Parallel & Top Jamb	Low Profile	Parallel Rigid (PR) CloserPlus (CLP) CloserPlus Spring (CPS)	Unitrol (UNI)	Unitrol-J (UNI-J)	Slide Track (ST)
Door						
Self Drilling Self Tapping	S	S	S	S		
Machine Screw	S	S	S	S	S	S
Sleeve Nut/Sex Nut			S	S	S	S
Frame						
Self Drilling Self Tapping	S	S	S	S	S	S
Machine Screw	S	S	S	S	S	S

S = Standard
Fasteners are standard (included) with closer package.
Examples:
8501 includes self drilling, self tapping and machine screws
PR8501 includes self drilling, self tapping, machine screws and sleeve nut/sex nuts

Optional Fasteners	Description	With Arms Specified Below					
		Regular Parallel & Top Jamb	Low Profile	Parallel Rigid (PR) CloserPlus (CLP) CloserPlus Spring (CPS)	Unitrol (UNI)	Unitrol-J (UNI-J)	Slide Track (ST)
Door							
SN^	Sleeve Nut/Sex Nut	O	O				
TBGN^	Thru Bolts & Grommet Nuts	O	O	O	O	O	O
SMS*	Sheet Metal Screws & Machine Screws	O	O	O	O	O	O
SSPxSMS	Standard Screw Pack & Sheet Metal Screws	O	O	O	O	O	O
TORX®*	Torx Drive Security Screw	O	O	O	O	O	O
Frame							
SMS*	Sheet Metal Screws & Machine Screws	O	O	O	O	O	O
SSPxSMS	Standard Screw Pack & Sheet Metal Screws	O	O	O	O	O	O
TORX®*	Torx Drive Security Screw	O	O	O	O	O	O

O = Optional
^ When SN or TBGN are ordered, standard screw packs are also furnished.
***When SMS or TORX screws are specified, standard screw packs ARE NOT furnished.**
Examples:
8501 x **SN** includes self drilling, self tapping, machine screws and sleeve/sex nuts
8501 x **SMS** includes sheet metal screws and machine screws

SN are for use on hollow metal doors and can also be used for thru bolting on wood doors. When selected SNs are supplied for 1-3/4" (44mm) thick doors unless specified for 2-1/4" (57mm) thick doors

TBGN are an alternative to SN for wood doors. When selected, TBGNs are supplied standard for 1-3/4" (44mm) thick doors. They can be specified for 2-1/4" (57mm) thick doors.

SMS - when the option is specified, closer will be packed with sheet metal screws for the door and sheet metal screws plus machine screws for the frame.

FINISHES

Norton offers waterborne acrylic, polyster powder coat and plated finishes. Custom finishes are available on special order. A sample and approval is required.

Waterborne acrylic and polyester powder coat will withstand 100 hours of salt spray (ANSI requires 25 hours).

ANSI/BHMA	Description
600*	Prime Coat
605^	Bright Brass
606^	Satin Brass
611^	Bright Bronze
612^	Satin Bronze
613E	Dark Oxidized Satin Bronze - Equivalent
619^	Satin Nickel
625^	Bright Chrome
626^	Satin Chrome

ANSI/BHMA	Description
689	Aluminum
690	Statuary Bronze
691	Dull Bronze
693	Black
694	Medium Amber
696	Gold
BSP	Black Suede Powder
WSP	White Suede Powder

* 600 is a special rust-inhibiting prime coat. Closers can be ordered prime coat only (specify closer x 600). An additional charge applies if finish coat is required over prime coat.

^ Plated finish

» Norton closer bodies and plastic covers are available in waterborne acrylic finishes. Arms and metal covers are available in powder coat or plated finishes.

» When a plated finish is ordered, arm and cover will be plated unless "cover only" is specified.

HOW TO ORDER

For optimum protection of door and frame assemblies, always use auxiliary wall, floor, or overhead door stop.

PREFIXES	8	3	0	1	H
	First Digit Defines Closer Series	**Second Digit** Specifies Cover Option	**Third Digit** Specifies Type	**Fourth Digit** Specifies Closer Size	**SUFFIXES**

Appearance Options
- **1 -** without cover
- **3 -** closer with Slim Line cover
- **5 -** closer with Full cover

1 - Full Power Range Closer adjustable sizes 1 through 6 (also adjustable to comply with Accessibility Code Closer Requirements)

No Prefix - 8301/8501 series designates Tri-Style®
- **S -** 8301/8501 regular arm application only, non-hold open
- **JS -** 8301/8501 top jamb application only, non-hold open
- **P -** 8301/8501 parallel arm application only, non-hold open 8381/8581 low profile closer
- **J -** Top Jamb installation. 2-3/4 to 7" reveal - 150° swing
- **PR -** Parallel rigid arm (parallel arm only - specify hand for hold open functions)
- **PRO -** Parallel rigid arm with offset soffit plate (parallel arm only - specify hand for hold open applications)
- **PS -** For push side mounted slide track only
- **R -** Regular rigid heavy-duty arm (Torx® screws not included)
- **CLP -** CloserPlus® arm (parallel arm only)
- **CPS -** CloserPlus Spring™ arm (parallel arm only)
- **UNI -** Unitrol® arm (parallel arm only - specify door width)
- **UNIJ -** Unitrol arm (top jamb only - specify frame reveal)

- **0 -** Specifies standard type arms for non-hold open, hold open closers
- **4 -** Specifies low profile slide track
- **8 -** Specifies a low profile arm for non-hold open closers only

No Suffixes - Standard non-hold open arm
- **H -** Standard hold open arm
- M - Metal cover; optional for series 8501 closers only (Specify hand for Top Jamb closer)
- **MLL -** Lead lined metal cover
- **A -** Optional Architectural Plastic cover (8501 only)
- **MA -** Optional Architectural Metal cover (8501 only)
- **T -** Thumbturn hold open on CloserPlus (CLP) & CloserPlus Spring (CPS) arms
- **DA -** Adjustable delayed action closing optional. Available with adjustable backcheck cushioning for all series
- **ST -** Slide track single lever arm (pull side standard. For push side prefix PS)
- **ST-180 -** Slide track single lever (pull side only); 180° swing
- **DE -** Pull side slide track arm for double egress frame with reveal (Handed)
- **G -** ABS cover
- **R -** Ramp hold open on CloserPlus® arm

Note:
- Door closer warranty becomes void if the closer is installed on the exterior side of a door in the exterior wall of a building.
- It is strongly recommended, and may be required on fire door assemblies, that doors having a door closer be hung on ball-bearing or anti-friction hinges or pivots. Consult local authority having jurisdiction.
- Failure to use fasteners supplied with closer may void factory warranty.
- Fasteners for fire/smoke door assemblies must conform to NFPA 80. In some applications additional fasteners may be mandated by NFPA 80 that are not shipped with standard Norton product, such as sleeve-nuts/sex-nuts or thru bolts and grommet nuts.
- Information provided is based on 1-3/4" (44mm) x 7' (2.13m) standard weight doors swinging to 110°. Other conditions (such as door height or weight; or wind/draft conditions) may require adjustment of spring setting, selection of a larger size closer or different closer.

The ASSA ABLOY Group is the global leader in access solutions. Every day, we help billions of people experience a more open world.

ASSA ABLOY Opening Solutions leads the development within door openings and products for access solutions in homes, businesses and institutions. Our offering includes doors, frames, door and window hardware, locks, perimeter fencing, access control and service.

Since 1880, Norton door controls have been an integral part of schools, hospitals and businesses around the globe. When you need products and people that perform at the highest level, rely on Norton – From Open to Close.

Norton Door Controls | www.nortondoorcontrols.com
3000 Highway 74 East | Monroe, NC 28112 | 1.877.974.2255

ASSA ABLOY Opening Solutions
Door Security Solutions Canada | www.assaabloy.ca
160 Four Valley Drive | Vaughan, ON L4K 4T9 | 800.461.3007

43085-M 05/21

Norton is a brand associated with ASSA ABLOY Accessories and Door Controls Group, Inc., an ASSA ABLOY Group company. Copyright © 2012-2021, ASSA ABLOY Accessories and Door Controls Group, Inc. All rights reserved. Reproduction in whole or in part without the express written permission of ASSA ABLOY Accessories and Door Controls Group, Inc. is prohibited.